US010337239B2

(12) **United States Patent**
Header

(10) **Patent No.: US 10,337,239 B2**
(45) **Date of Patent: Jul. 2, 2019**

(54) **HIGH PERFORMANCE FENESTRATION SYSTEM**

(71) Applicant: **Gregory A. Header**, Richland, PA (US)

(72) Inventor: **Gregory A. Header**, Richland, PA (US)

(*) Notice: Subject to any disclaimer, the term of this patent is extended or adjusted under 35 U.S.C. 154(b) by 205 days.

(21) Appl. No.: **15/376,183**

(22) Filed: **Dec. 12, 2016**

(65) **Prior Publication Data**

US 2018/0163458 A1 Jun. 14, 2018

(51) **Int. Cl.**
E06B 7/14 (2006.01)
E06B 3/36 (2006.01)
(Continued)

(52) **U.S. Cl.**
CPC ***E06B 7/14*** (2013.01); ***E06B 3/362*** (2013.01); ***E06B 3/365*** (2013.01);
(Continued)

(58) **Field of Classification Search**
CPC .. E06B 3/26301; E06B 3/26303; E06B 3/325; E06B 3/36; E06B 2003/7094; Y10S 49/01
See application file for complete search history.

(56) **References Cited**

U.S. PATENT DOCUMENTS

3,203,053 A * 8/1965 Lane E06B 3/26307 49/489.1
4,432,179 A * 2/1984 Bachmann E06B 1/325 49/DIG. 1
(Continued)

FOREIGN PATENT DOCUMENTS

CA 2036939 C 1/1996
CA 2184930 A1 3/1998
(Continued)

OTHER PUBLICATIONS

Peerless GT2 Thermal Aluminum Inswing Terrace Door, Terrace Door Product Brochure, Feb. 3, 2016, Peerless Products Inc., Fort Scott, Kansas, US.
(Continued)

Primary Examiner — Catherine A Kelly
(74) *Attorney, Agent, or Firm* — Stone Creek Services LLC; Alan M Flum

(57) **ABSTRACT**

A high-performance fenestration system that includes a pressure chamber formed between longitudinally adjacent fenestration members. The pressure chamber is positioned on one side of the thermal break. The fenestration system can be configured so to create a continuous pressure chamber around the closed perimeter of the fenestration between the frame and sash. The resulting fenestration system enjoys significantly better water penetration resistance as compared with conventional high-performance doors and windows. Because of the positioning and structural configuration of the pressure chamber, the fenestration system can be configured to accept different hinge styles including Euro-style and American-style hinges without significant loss of performance. In addition, the system can accept American-style door hardware or Euro-style door hardware.

12 Claims, 40 Drawing Sheets

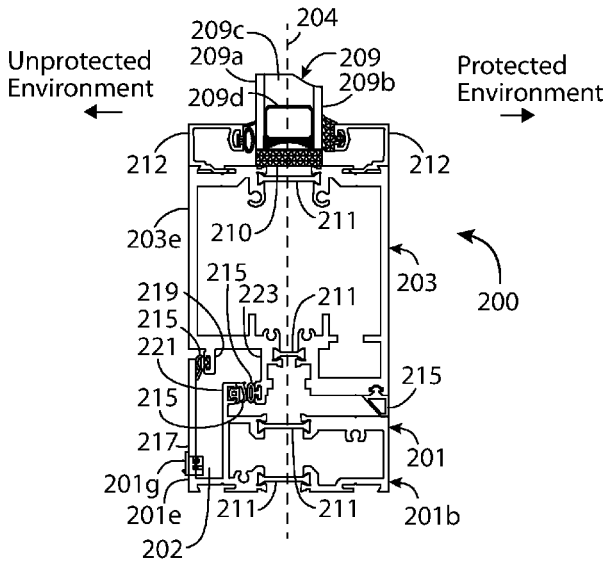

(51) **Int. Cl.**
E06B 1/70 (2006.01)
E06B 3/263 (2006.01)

(52) **U.S. Cl.**
CPC *E06B 2001/707* (2013.01); *E06B 2003/26389* (2013.01); *Y10S 49/01* (2013.01)

(56) **References Cited**

U.S. PATENT DOCUMENTS

4,471,589	A *	9/1984	Schmidlin	E06B 3/2605	52/171.3
4,614,062	A *	9/1986	Sperr	E06B 3/26303	49/401
4,640,054	A *	2/1987	Breimeier	E06B 3/26343	49/504
4,688,366	A *	8/1987	Schmidt	E06B 3/2675	264/261
4,815,245	A *	3/1989	Gartner	E06B 3/26343	49/DIG. 1
4,999,950	A	3/1991	Beske et al.		
5,044,121	A *	9/1991	Harbom	E06B 3/325	49/401
5,924,244	A *	7/1999	Ohman	E05D 15/44	49/248
6,588,154	B1 *	7/2003	Miller	E06B 3/50	49/401
8,276,320	B2 *	10/2012	Erbrect	E06B 7/14	49/471
9,062,490	B2 *	6/2015	Kadavy	E06B 7/16	
9,920,568	B2 *	3/2018	Rethmeier	E06B 3/26303	
10,113,356	B2 *	10/2018	Lenox	E06B 3/26303	
2004/0025454	A1 *	2/2004	Burgess	E06B 3/26301	52/204.1
2014/0237918	A1	8/2014	Miller		
2017/0350186	A1 *	12/2017	Philips	E06B 3/26301	
2018/0216397	A1 *	8/2018	Chen	E06B 3/36	

FOREIGN PATENT DOCUMENTS

CN	202117492	U	1/2012
CN	205918298	U	2/2017
FR	2877032	A1	4/2006
FR	2880056	B1	7/2008

OTHER PUBLICATIONS

Peerless GT3 Thermal Aluminum Inswing Terrace Door, Terrace Door Product Brochure, Feb. 3, 2016, Peerless Products Inc., Fort Scott, Kansas, US.

Graham Architectural Products Terrace Door—2 3/4" Series GT7700, Mar. 16, 2013, Graham Architectural Products, York, Pennsylvania, US.

1700 D00R, Jun. 2014, Skyline Windows, Bronx, NY US.

Brent Miller, Re: HP In-swing TD (In-house and private testing of the Inventor's own work), Oct. 11, 2016, Solar Innovations Inc., Pine Grove, Pennsylvania, US.

NX-8900 Terrace Doors, Document No. SPCA300EN, Aug. 2016, Kawneer Company, Inc., Norcross, Georgia, US.

9050 Series Spec Data Sheet, Oct. 2010, WinDoor Incorporated., Orlando, Florida, US.

Azo-Core thermal barrier, Azo-core Brochure, Aug. 2016, Azon, Kalamazoo, Michigan, US.

B.M. Brown, Requisition by the Examiner, Canadian Patent Application No. CA298,692, Sep. 26, 2018, Canadian Intellectual Property Office, Gatineau, Quebec, Canada.

* cited by examiner

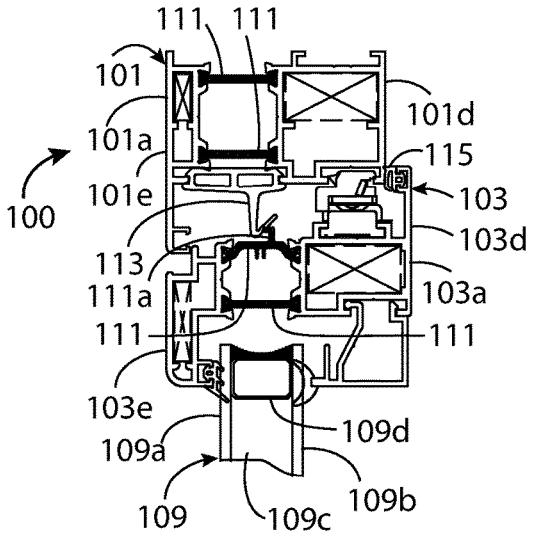

FIG. 1 Prior Art

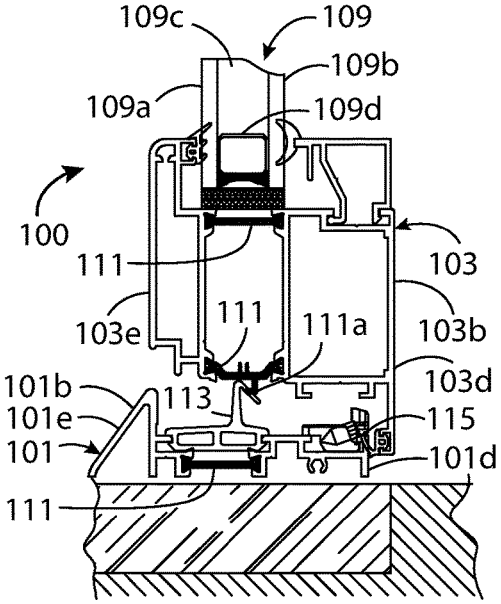

FIG. 2 Prior Art

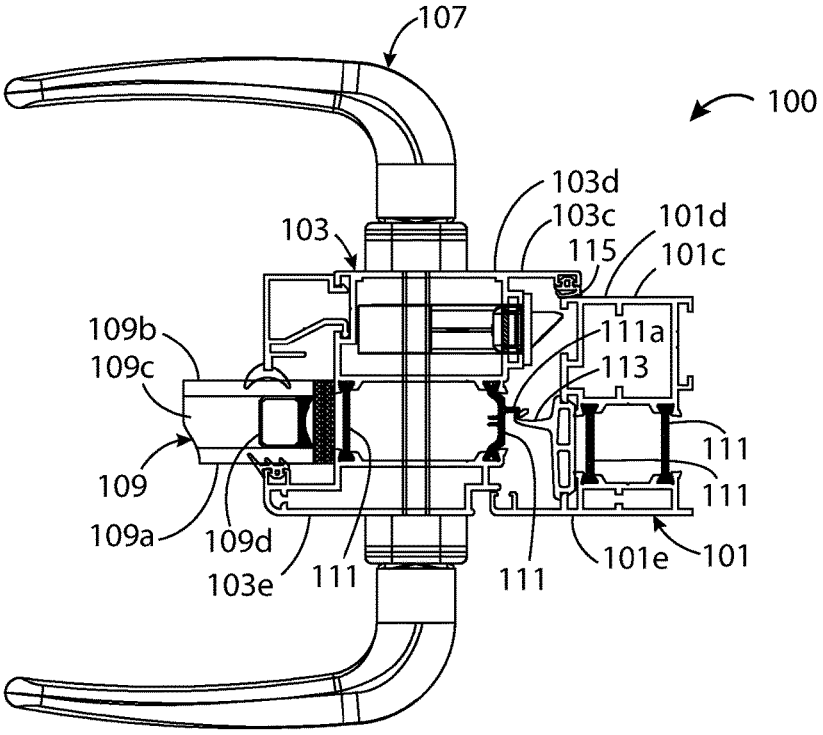

FIG. 3 Prior Art

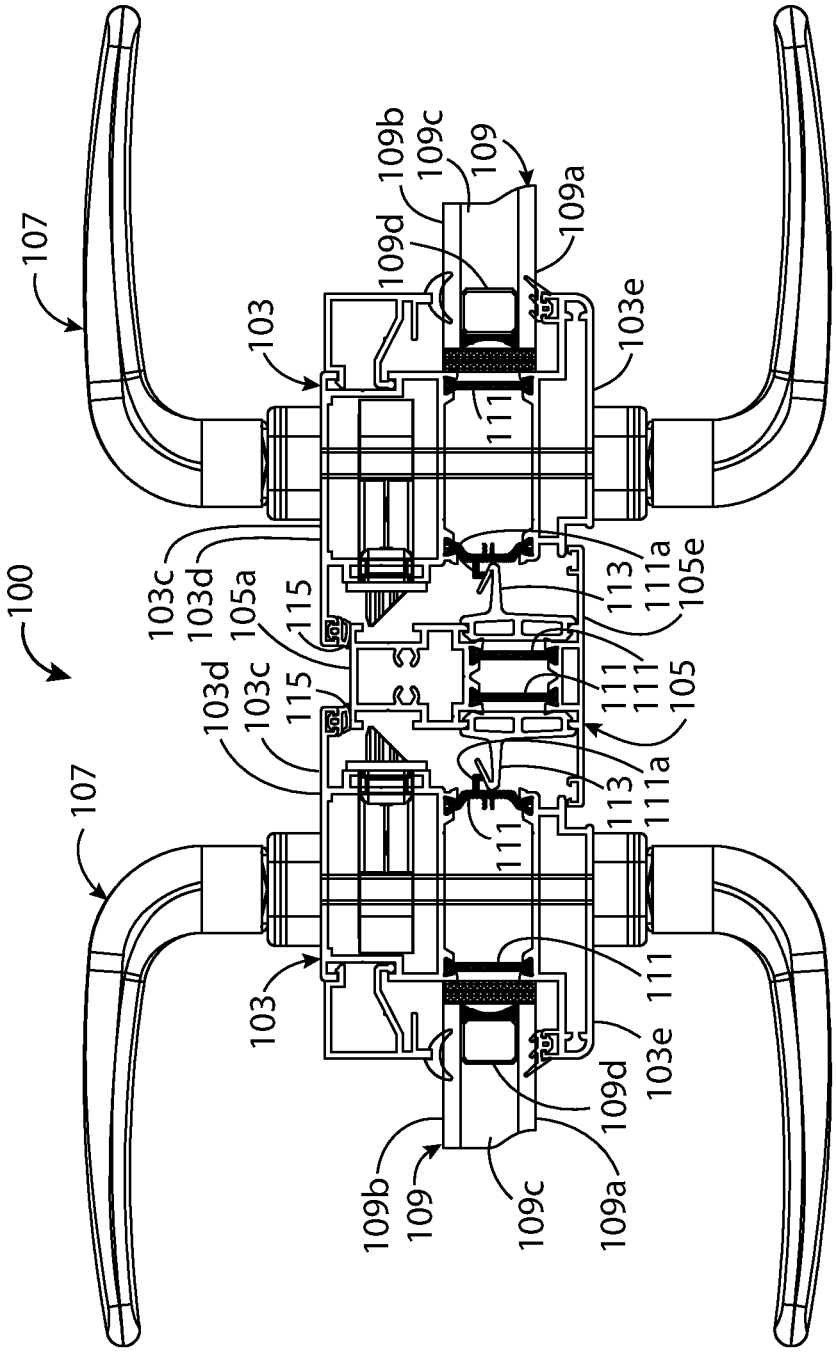

FIG. 4 Prior Art

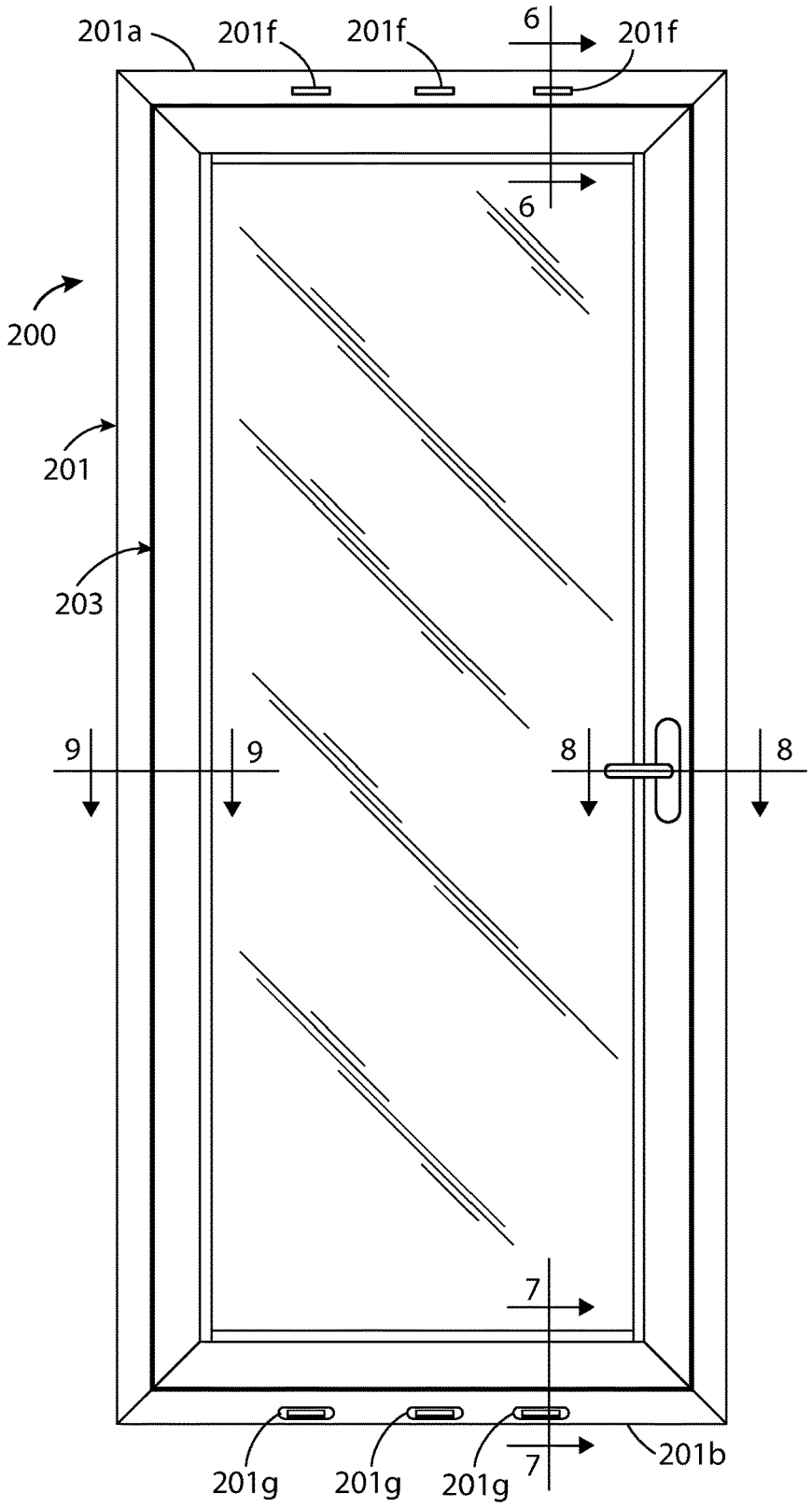

FIG. 5

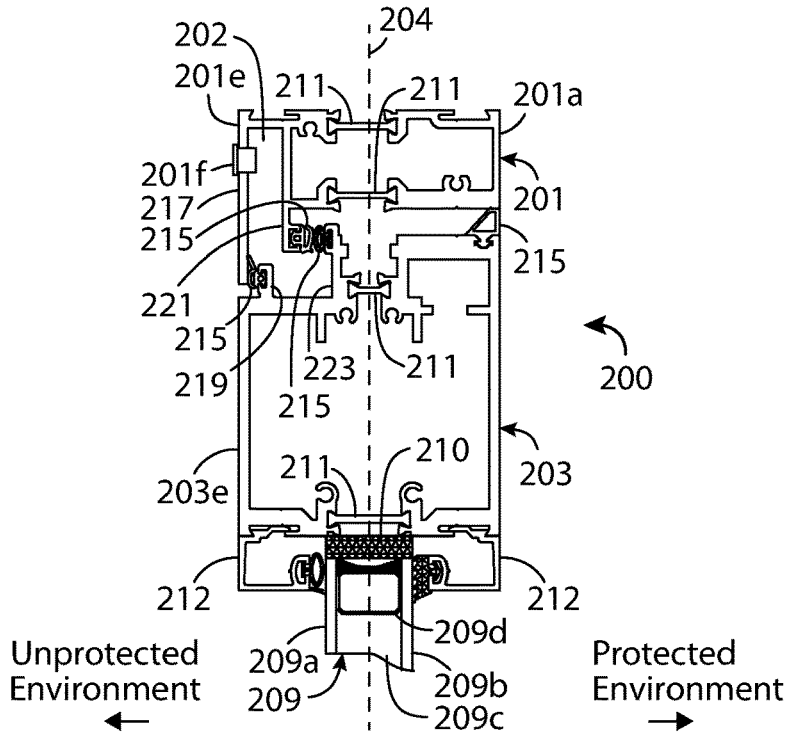
204
202
201e
211
211
201a
201f
217
215
201
215
221
215
223
211
200
219
215
203
211
210
203e
212
212
209d
Unprotected Environment
209a
209
209b
209c
Protected Environment

FIG. 6

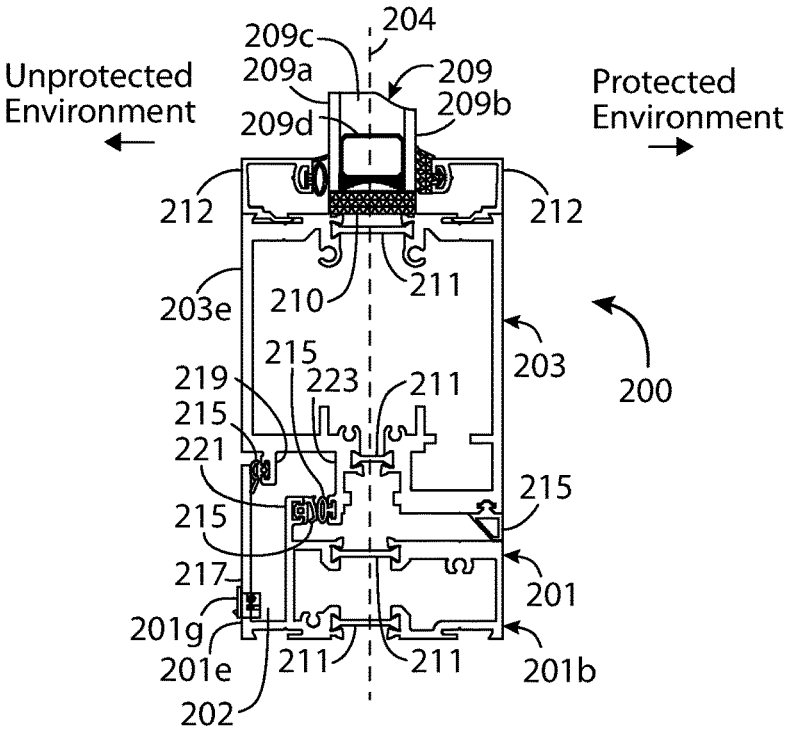
204
209c
209a
209
209b
Unprotected Environment
209d
Protected Environment
212
212
211
210
203e
203
215
223
211
200
219
215
221
215
215
217
201
201g
201e
211
211
201b
202

FIG. 7

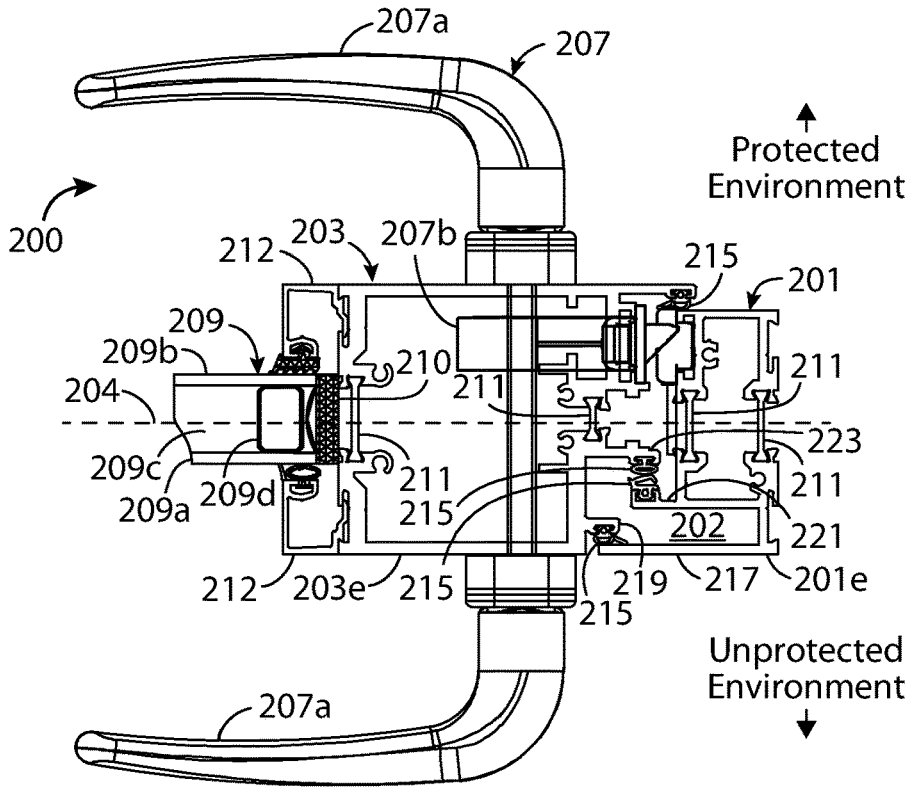
207a
207
Protected Environment
200
212
203
207b
215
201
209
209b
210
211
204
211
223
209c
209d
211
209a
215
211
202
221
212
203e
215
219
217
201e
215
Unprotected Environment
207a

FIG. 8

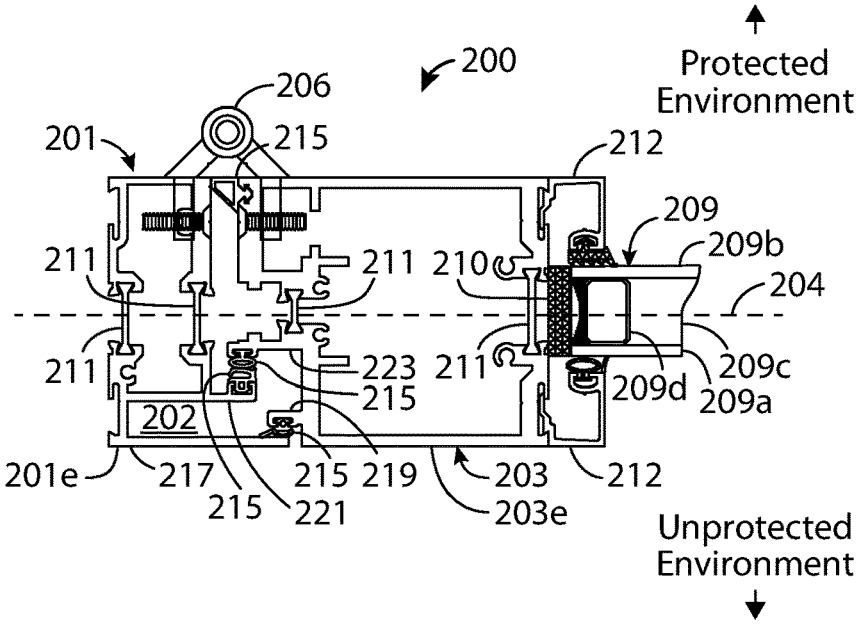
200
Protected Environment
206
201
215
212
209
209b
211
211
210
204
211
223
211
209c
215
209d
209a
202
201e
217
215
219
203
212
215
221
203e
Unprotected Environment

FIG. 9

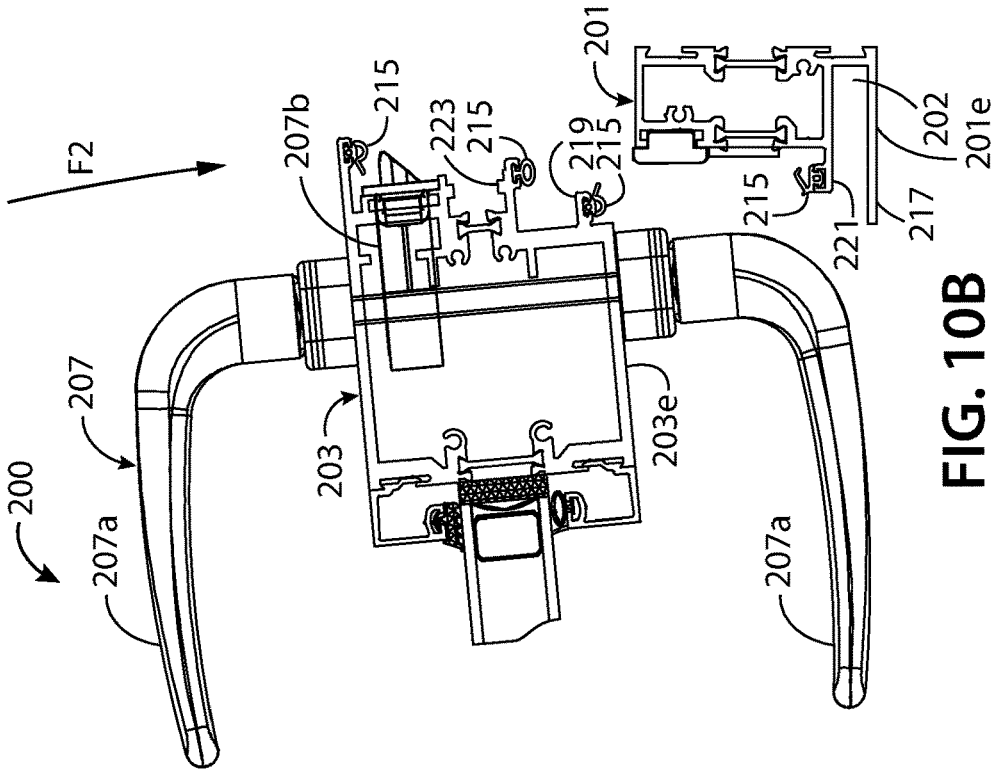

FIG. 10B

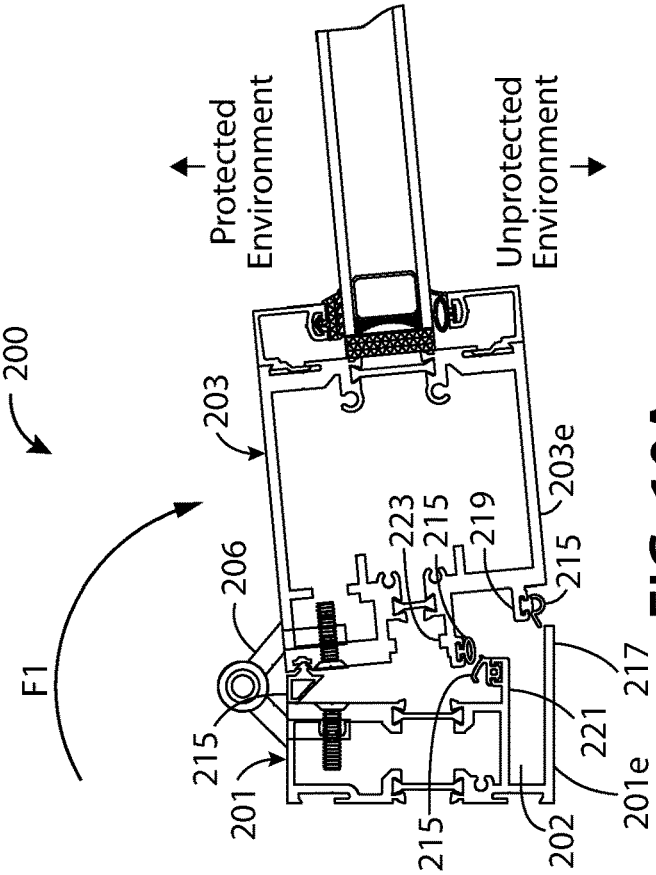

FIG. 10A

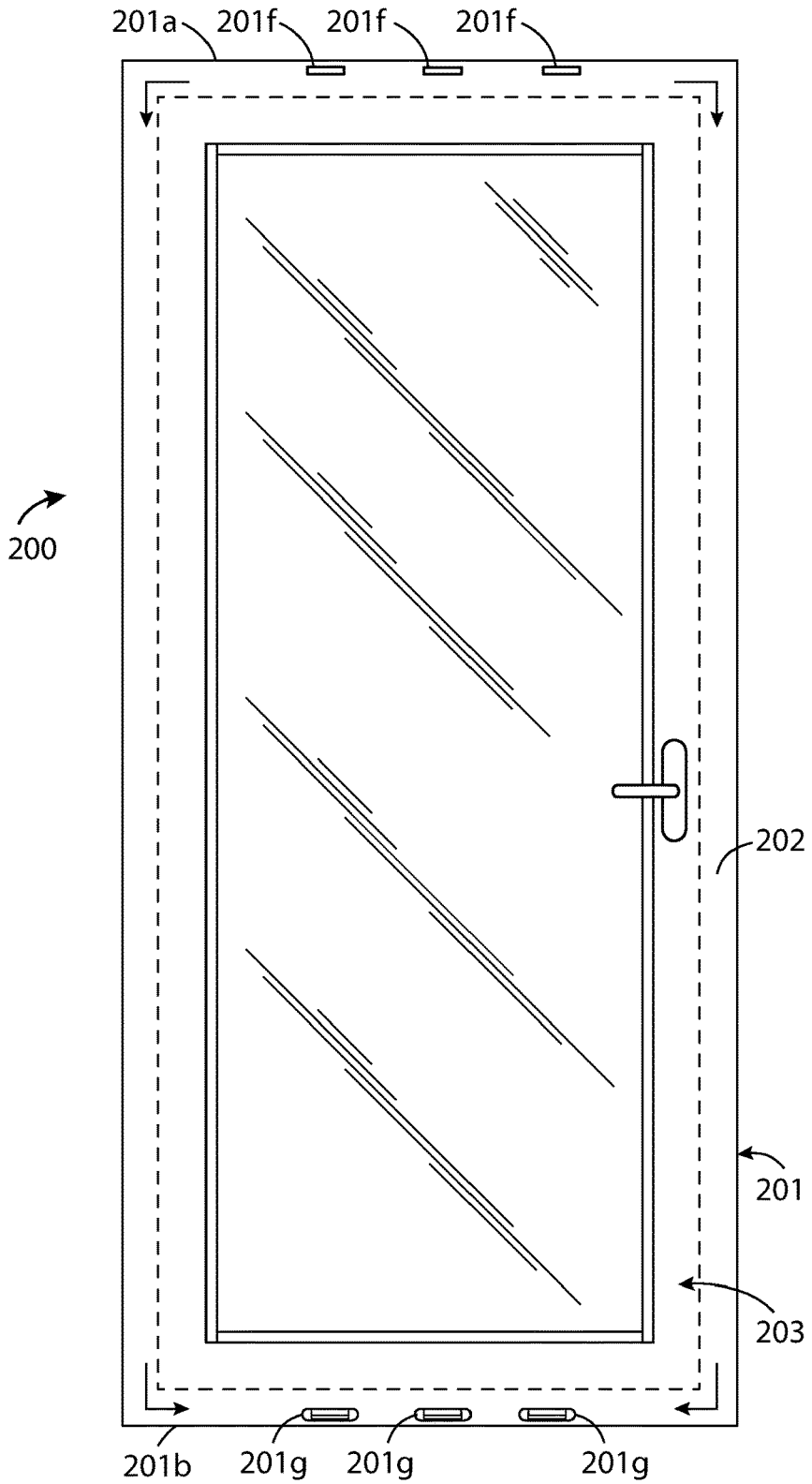

FIG. 11

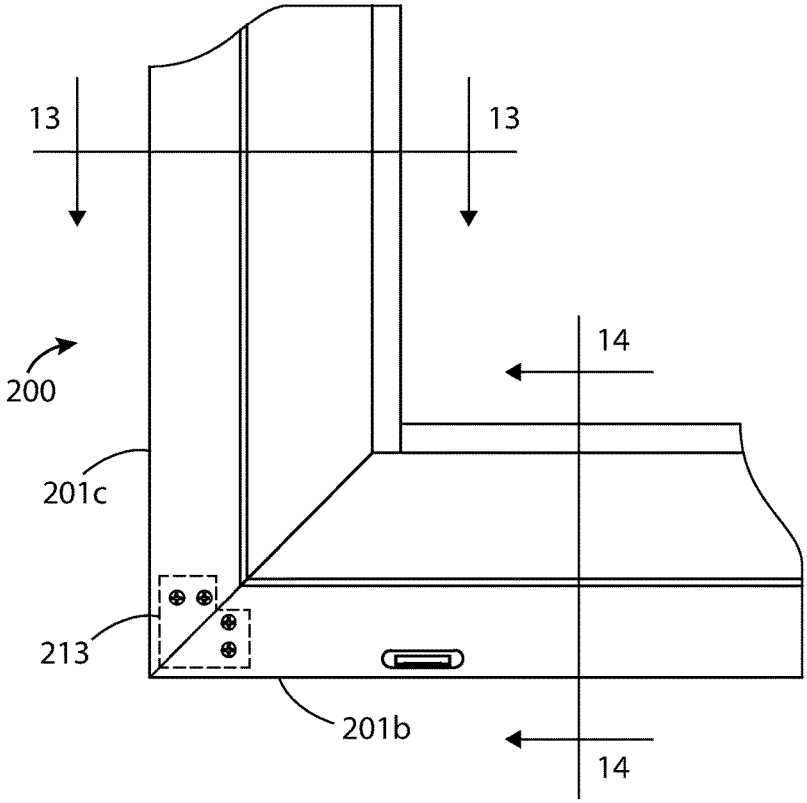

FIG. 12

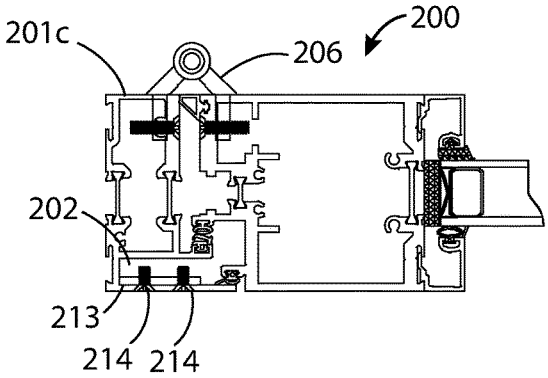

FIG. 13

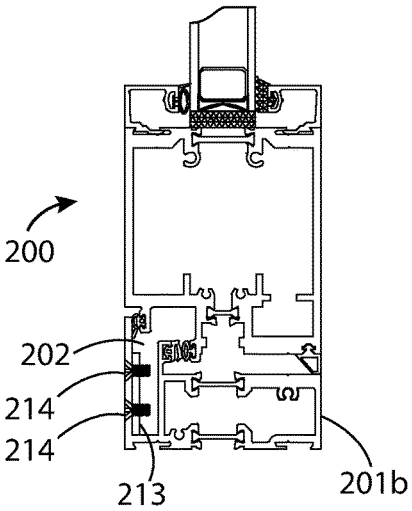

FIG. 14

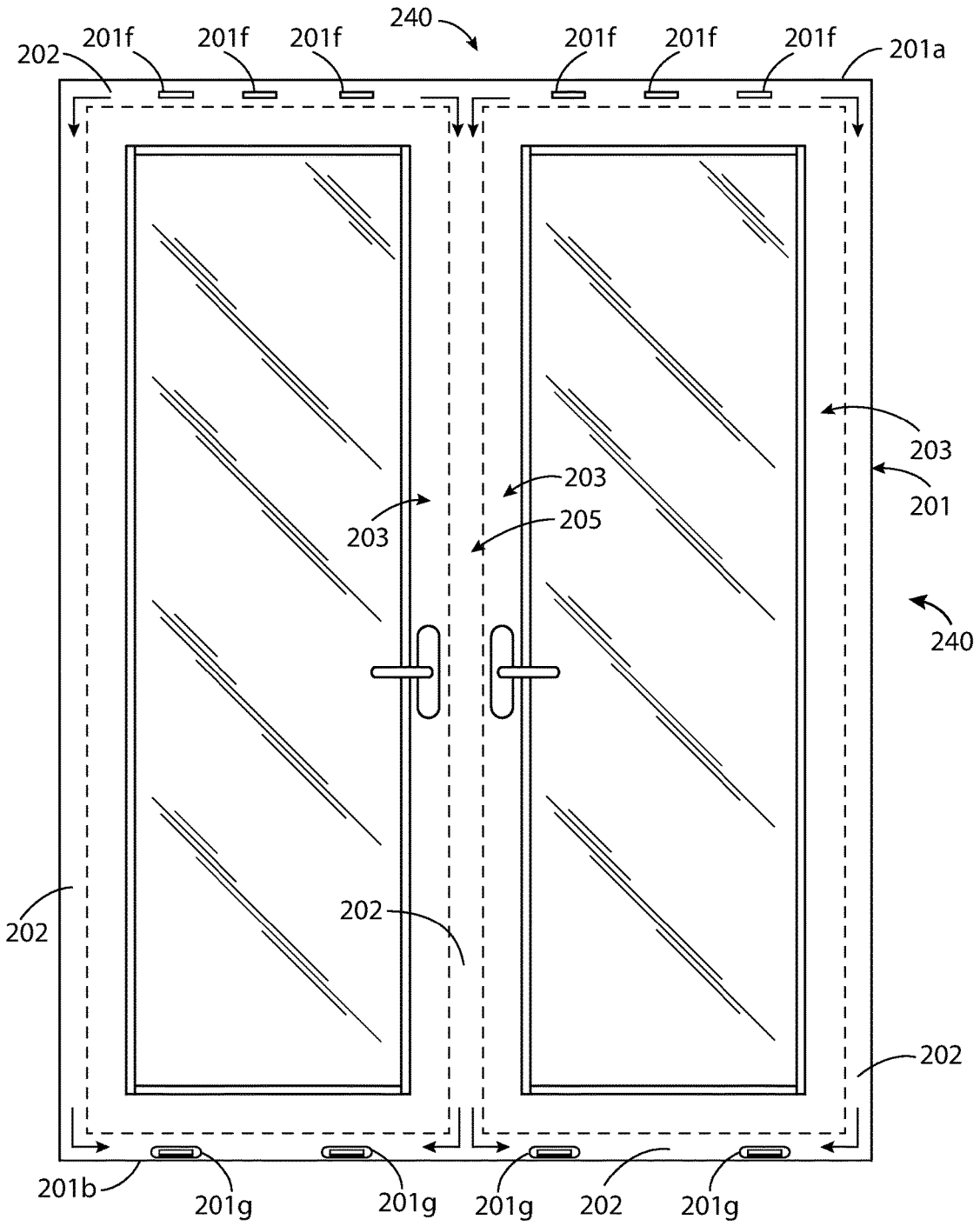
240
202
201f
201f
201f
201f
201f
201f
201a
203
203
205
203
201
240
202
202
202
201b
201g
201g
201g
202
201g

FIG. 15

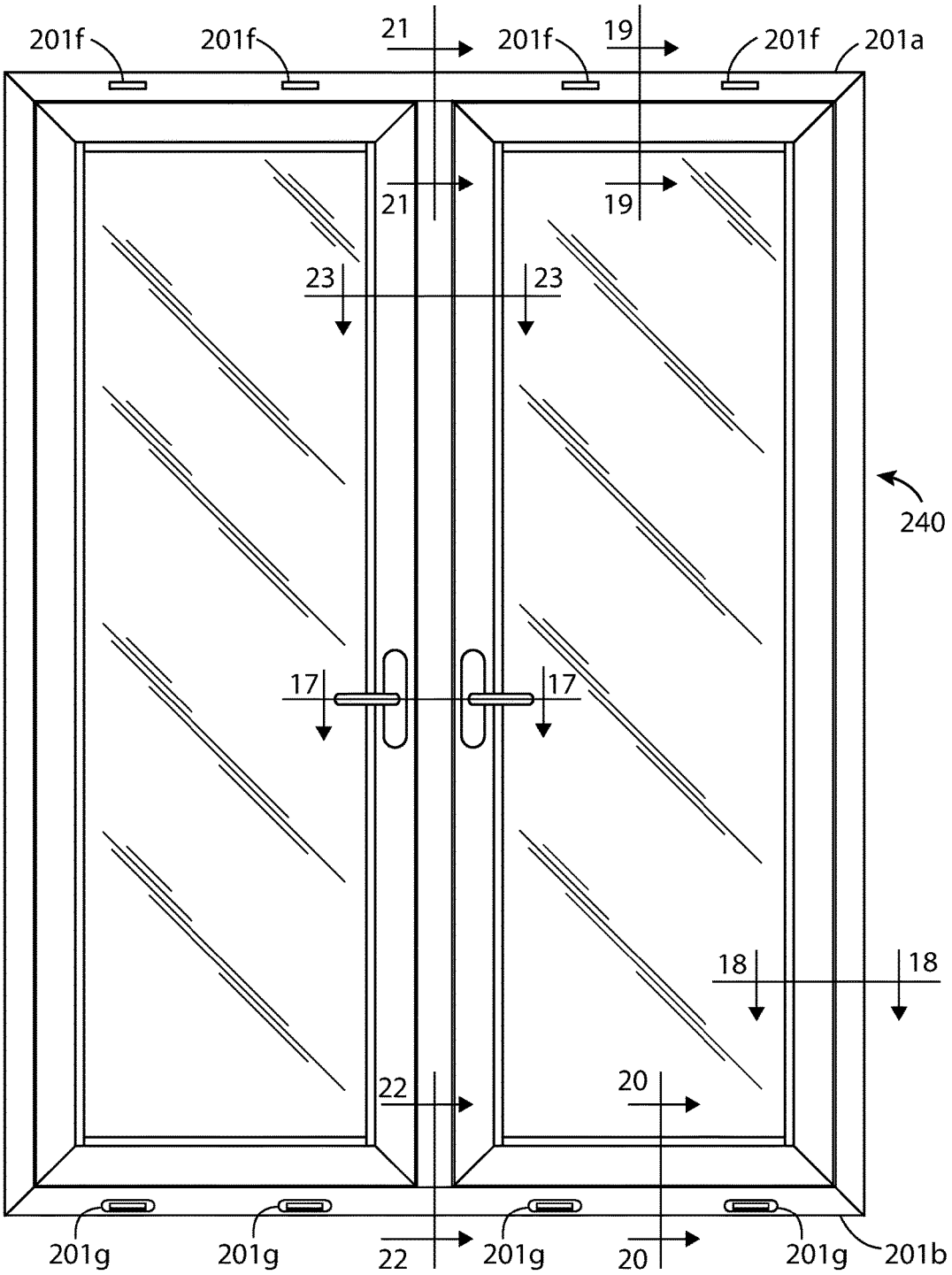
201f
201f
21
201f
19
201f
201a
21
19
23
23
240
17
17
18
18
22
20
201g
201g
22
201g
20
201g
201b

FIG. 16

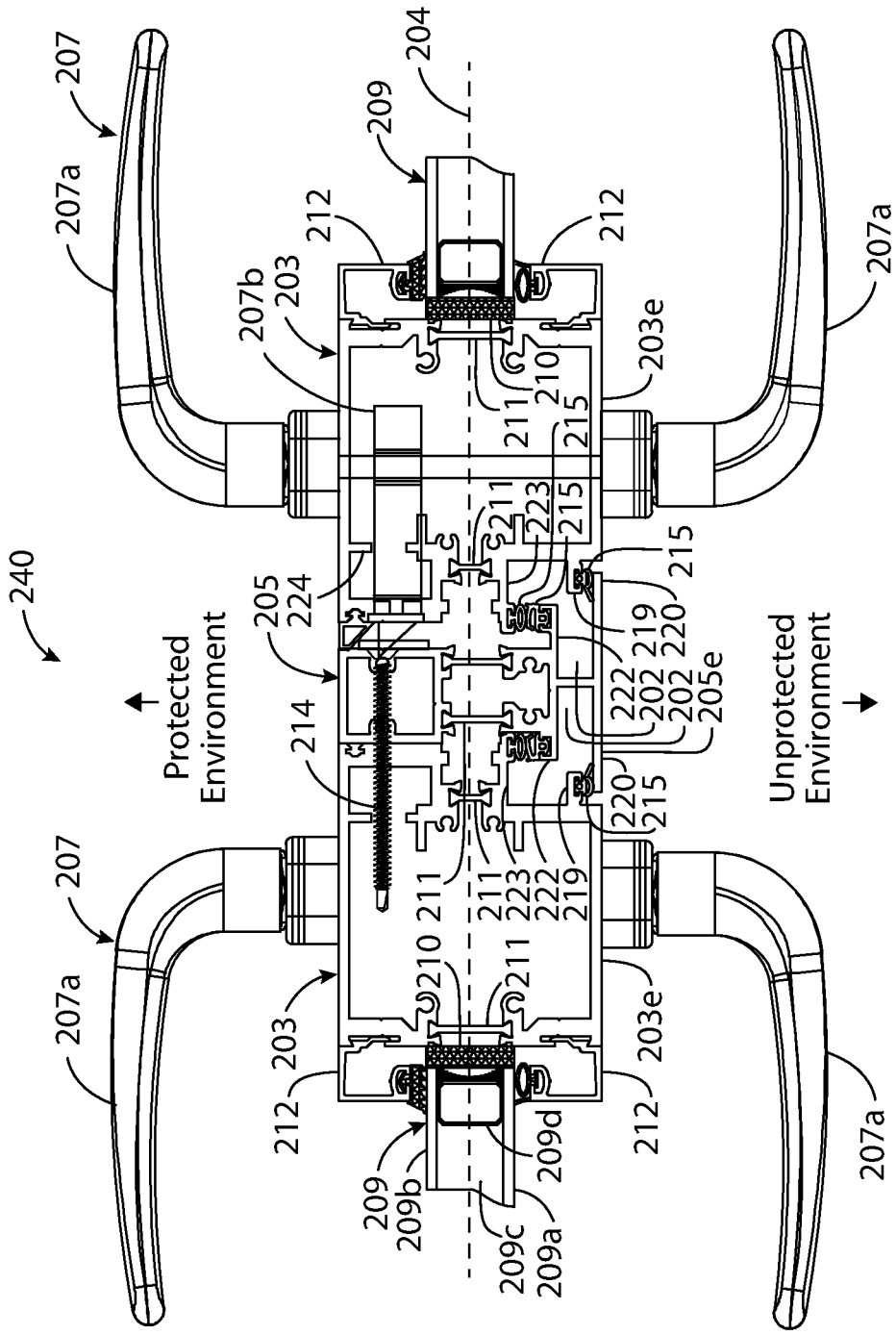
240
Protected Environment
Unprotected Environment
207
207a
207b
203
203e
204
205
205e
209
209a
209b
209c
209d
210
211
212
214
215
219
220
222
223
224
202

FIG. 17

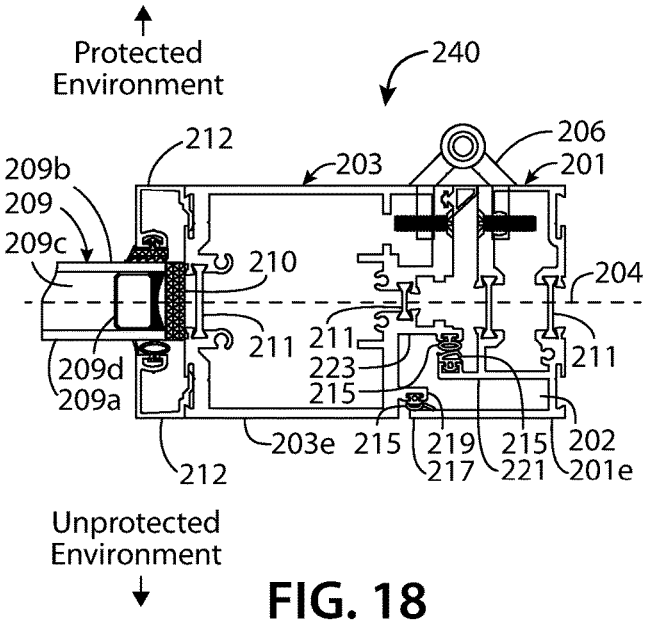

FIG. 18

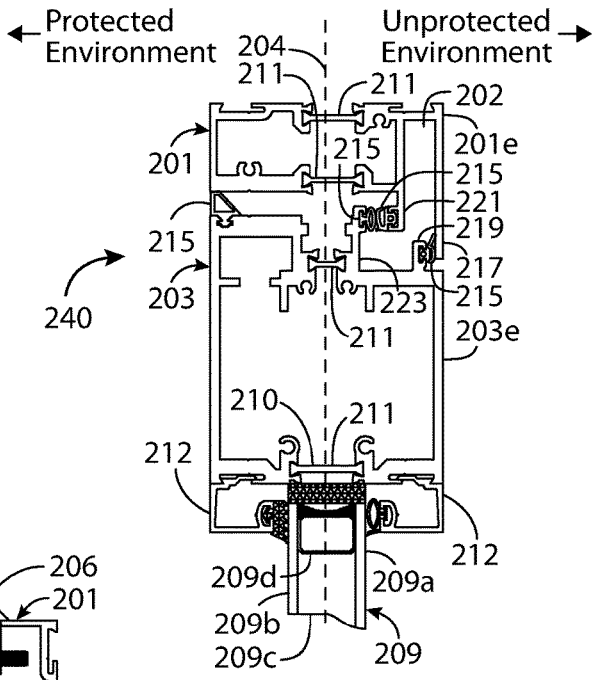

FIG. 19

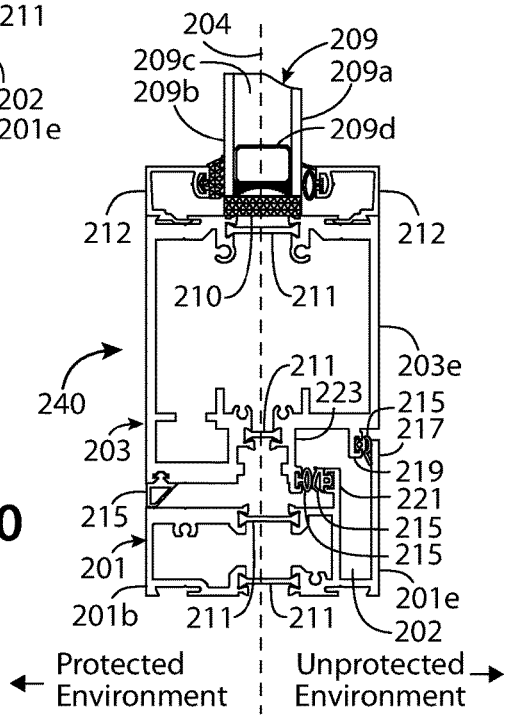

FIG. 20

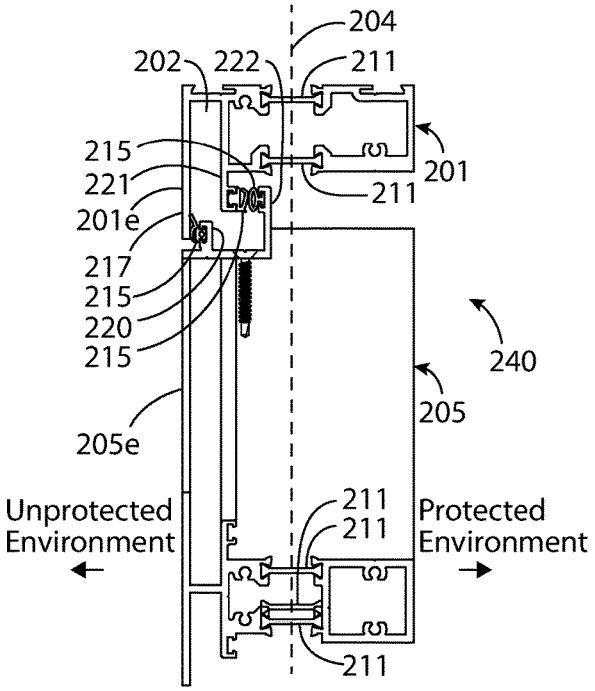

FIG. 21

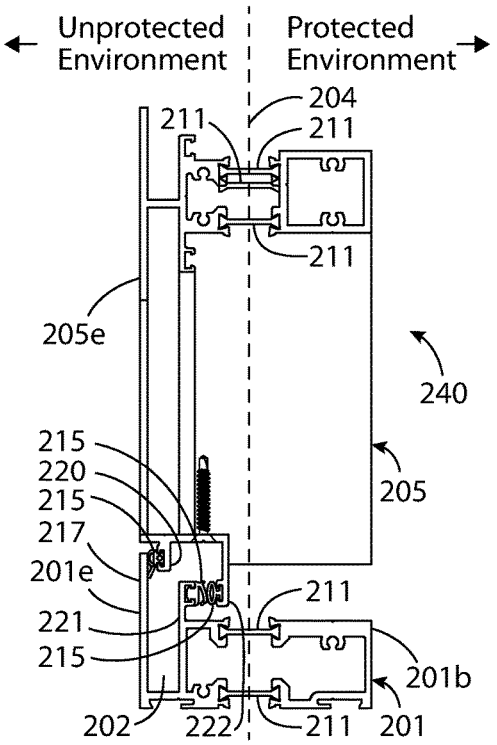

FIG. 22

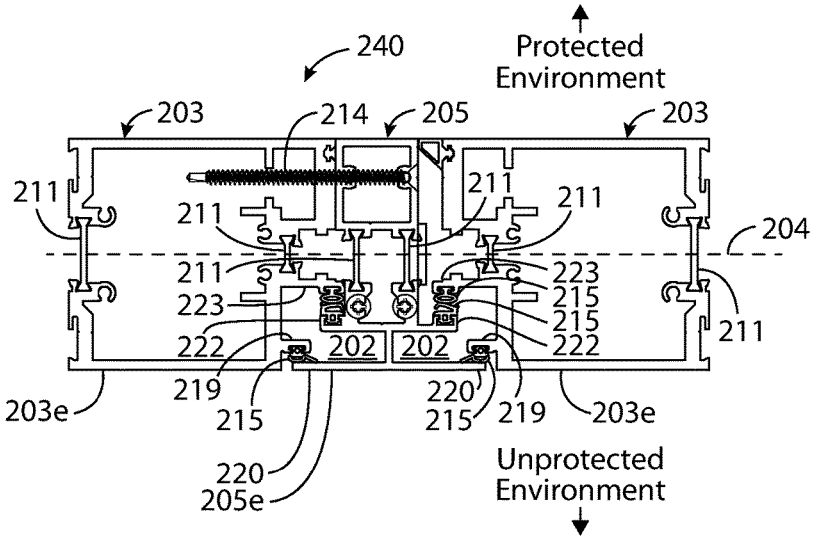

FIG. 23

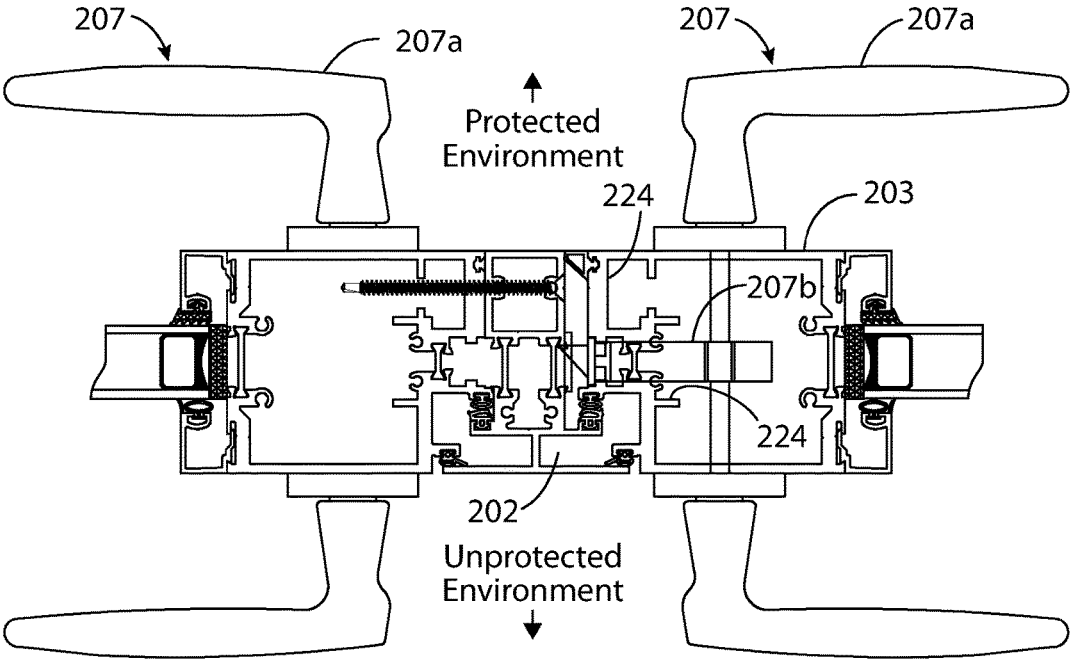
207
207a
207
207a
Protected
Environment
224
203
207b
224
202
Unprotected
Environment

FIG. 24

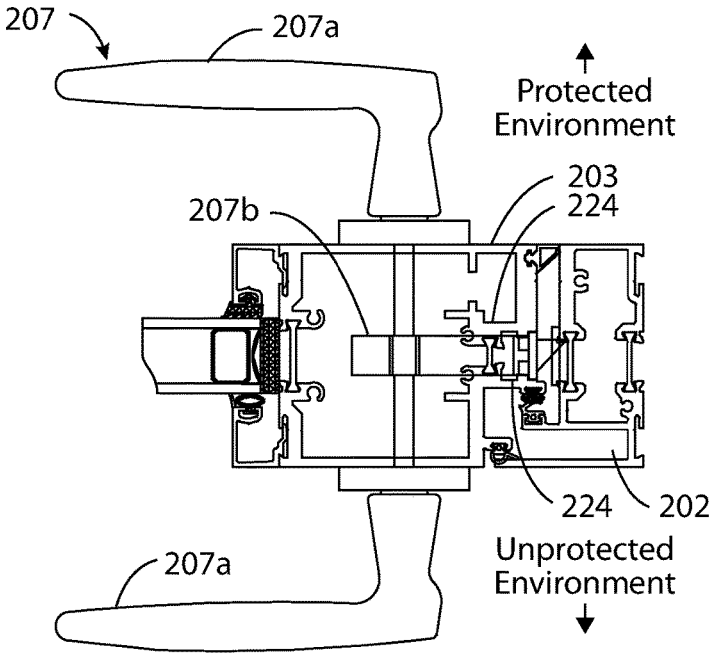
207
207a
Protected
Environment
203
224
207b
224
202
207a
Unprotected
Environment

FIG. 25

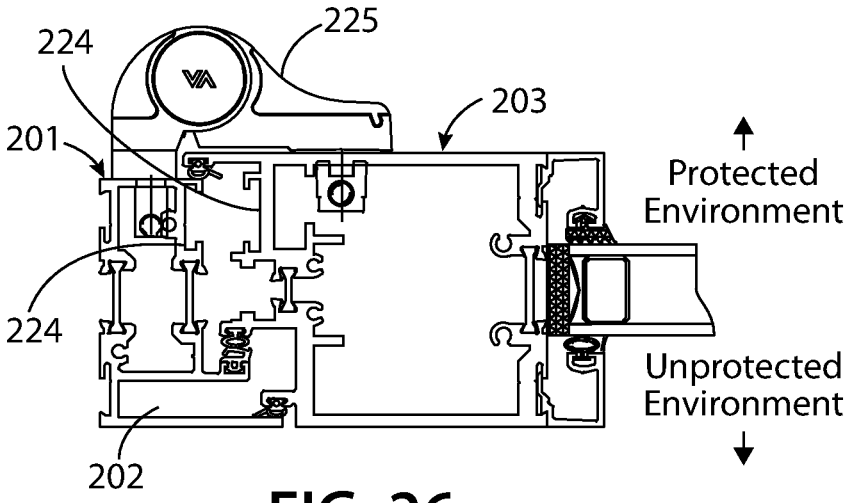

FIG. 26

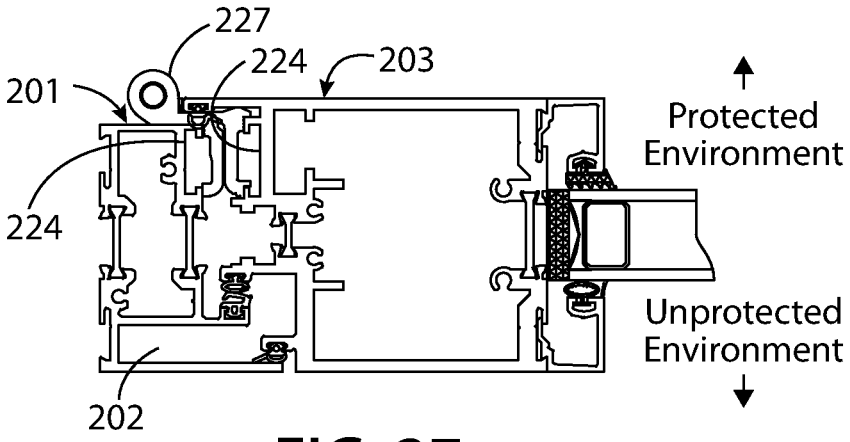

FIG. 27

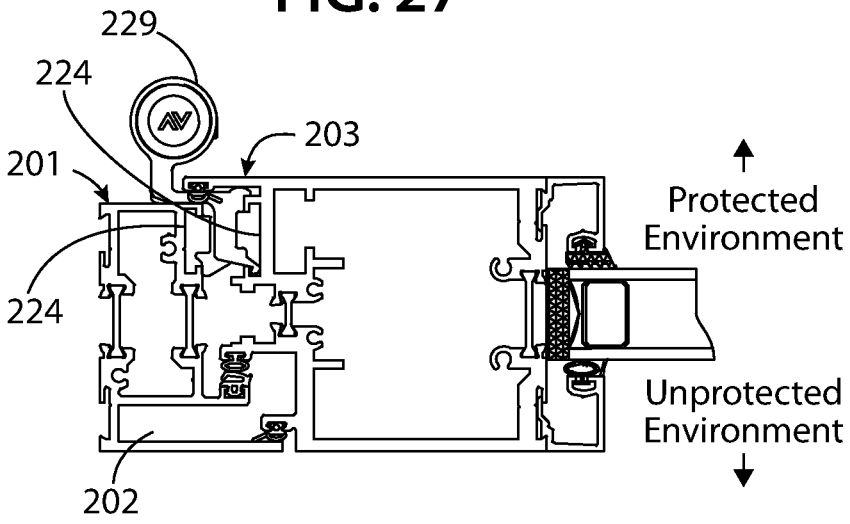

FIG. 28

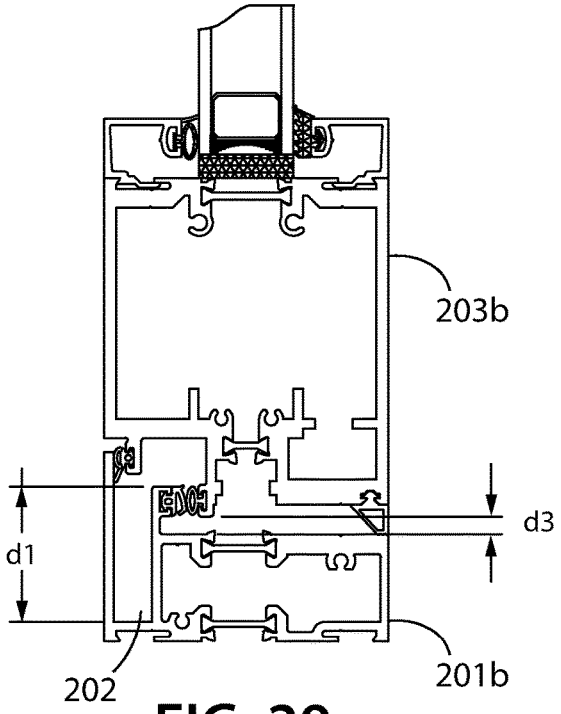

FIG. 29

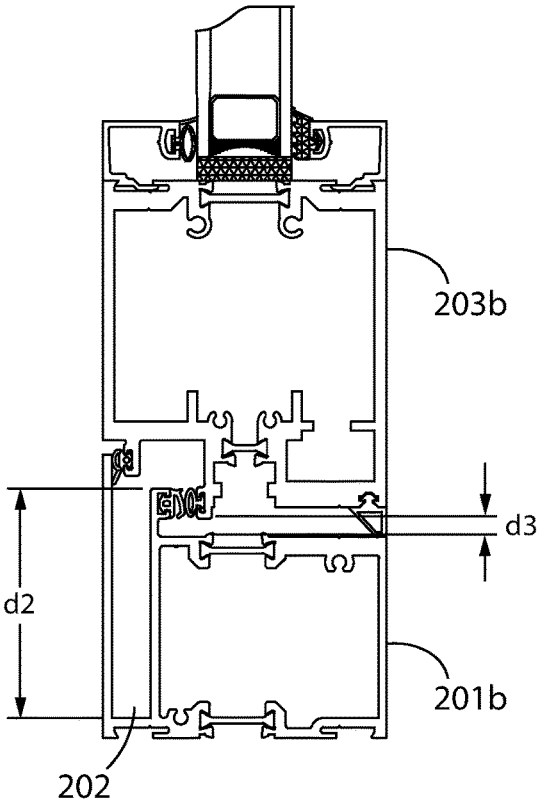

FIG. 30

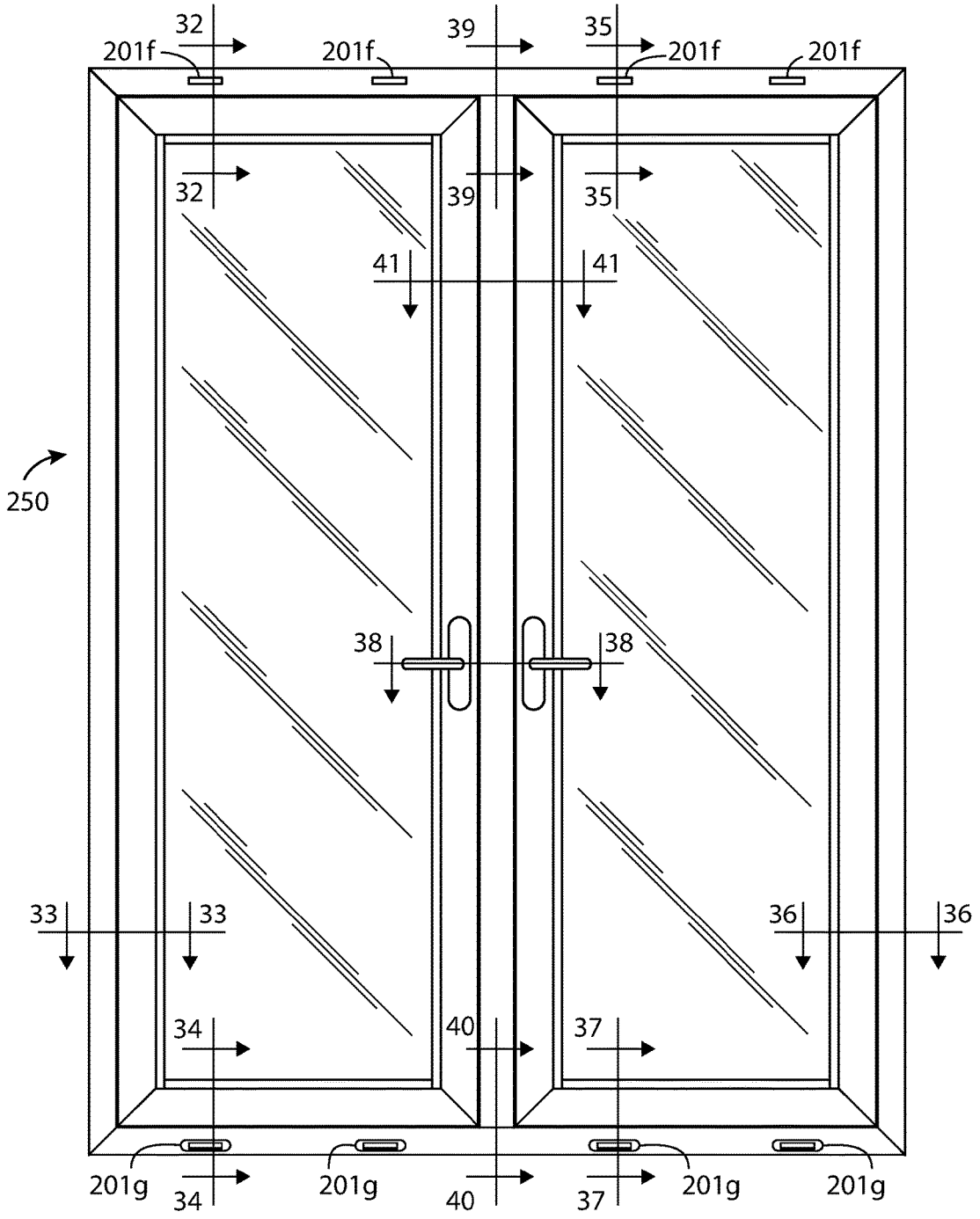
32
39
35
201f
201f
201f
201f
32
39
35
41
41
250
38
38
33
33
36
36
34
40
37
201g
34
201g
40
37
201g
201g

FIG. 31

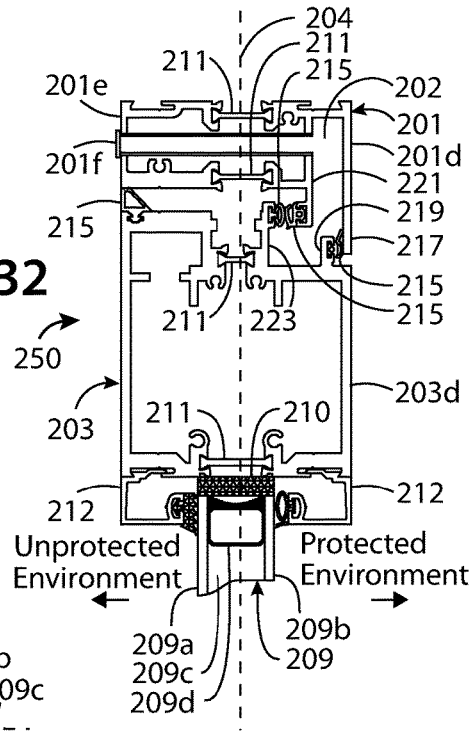

FIG. 32

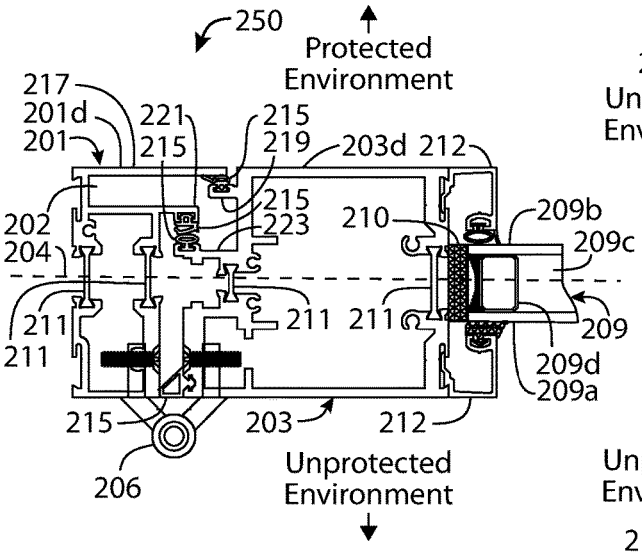

FIG. 33

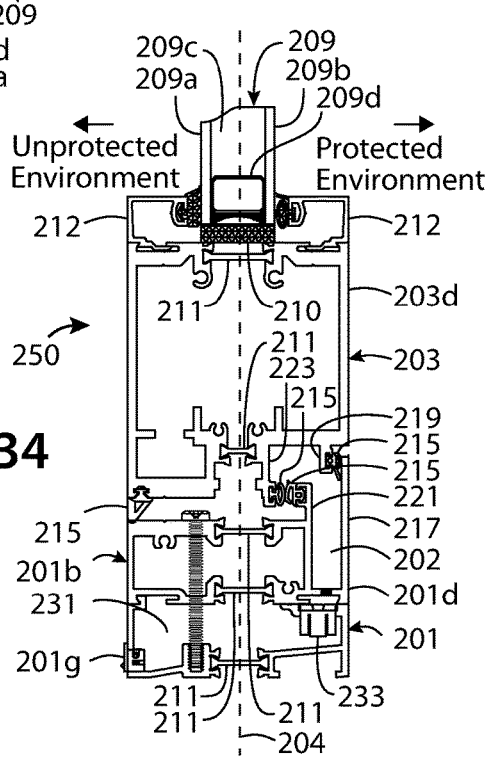

FIG. 34

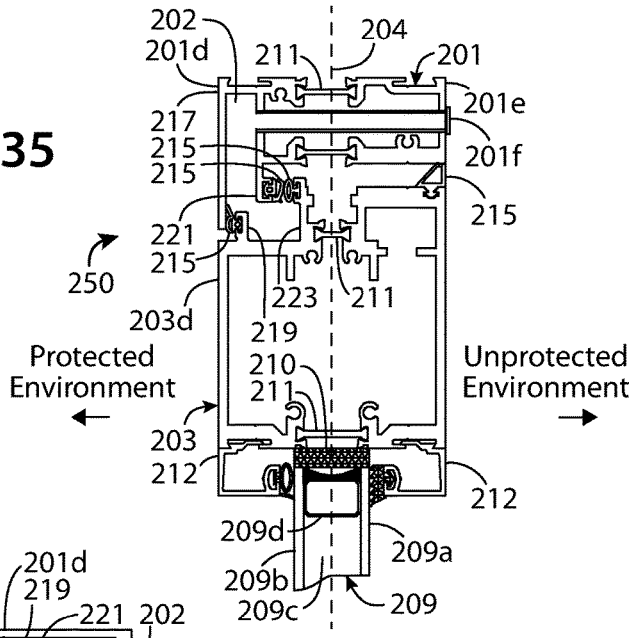

FIG. 35

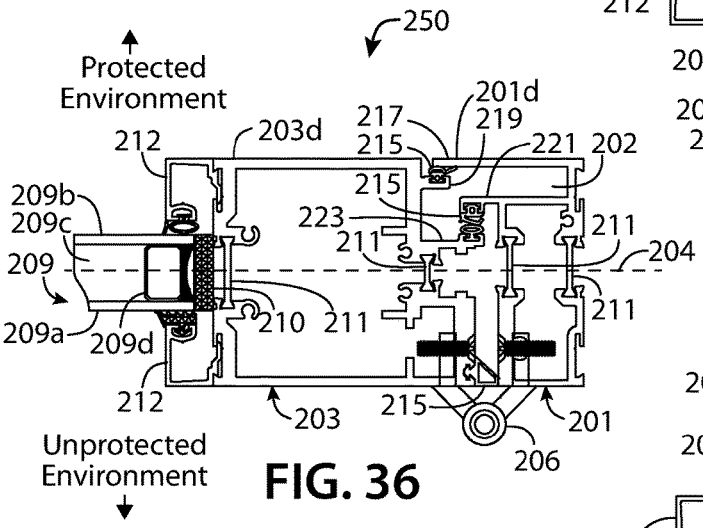

FIG. 36

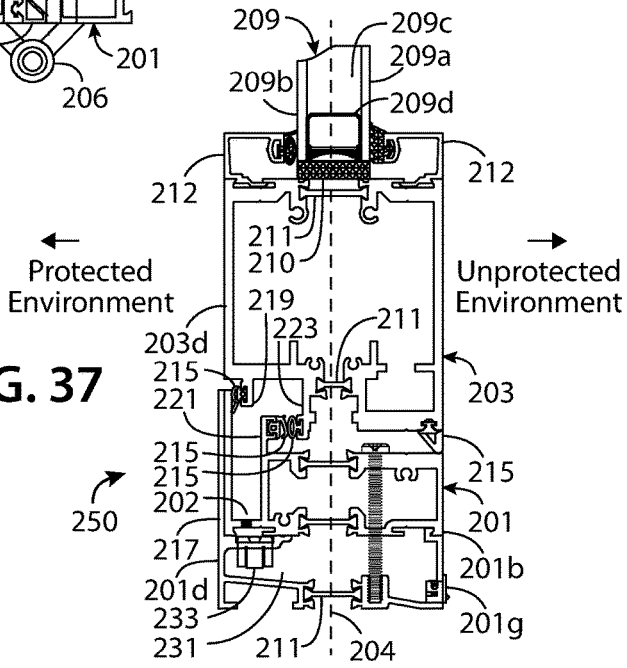

FIG. 37

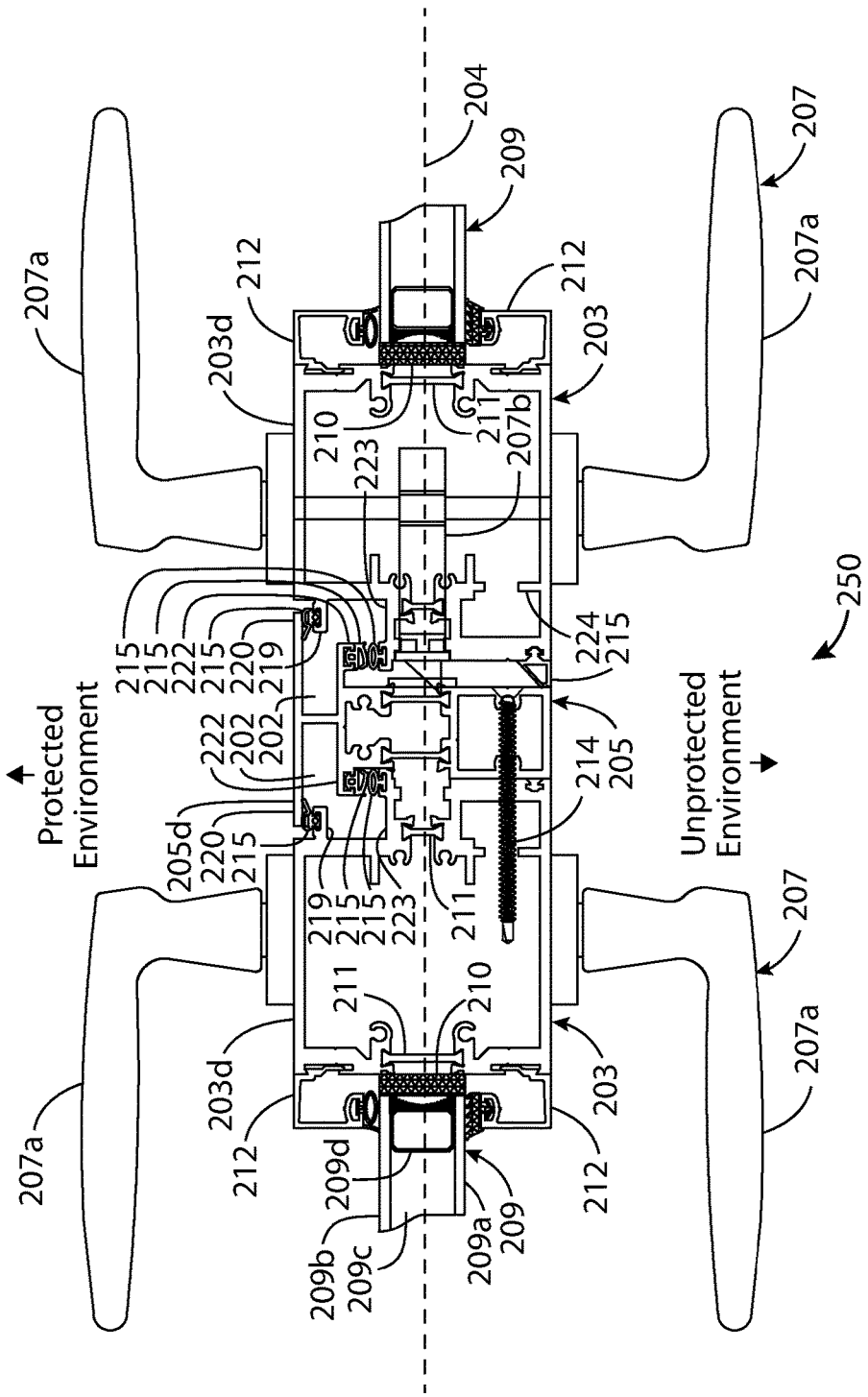
Protected Environment
Unprotected Environment
207a
207
204
209
212
203d
203
210
211
207b
223
215
222
220
219
202
205d
205
214
224
250
209d
209b
209c
209a

FIG. 38

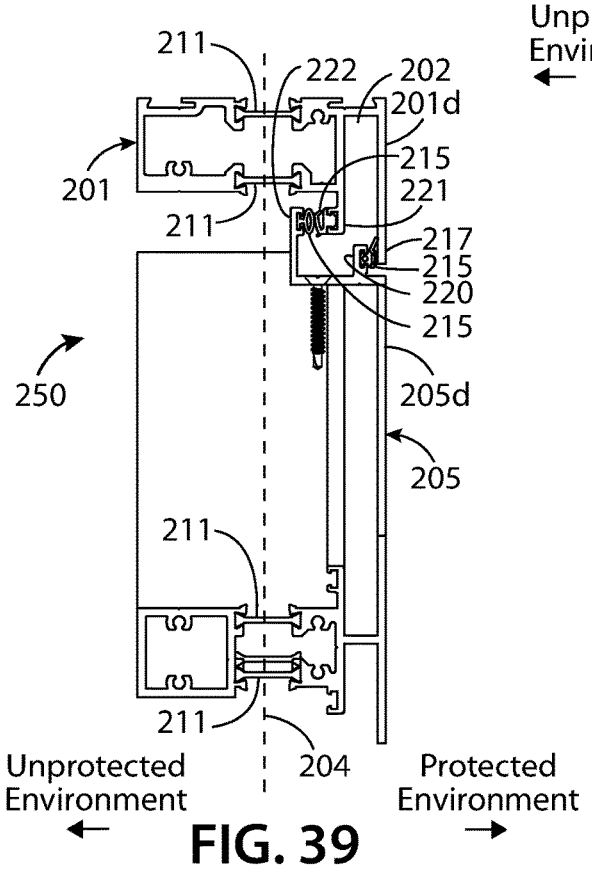

FIG. 39

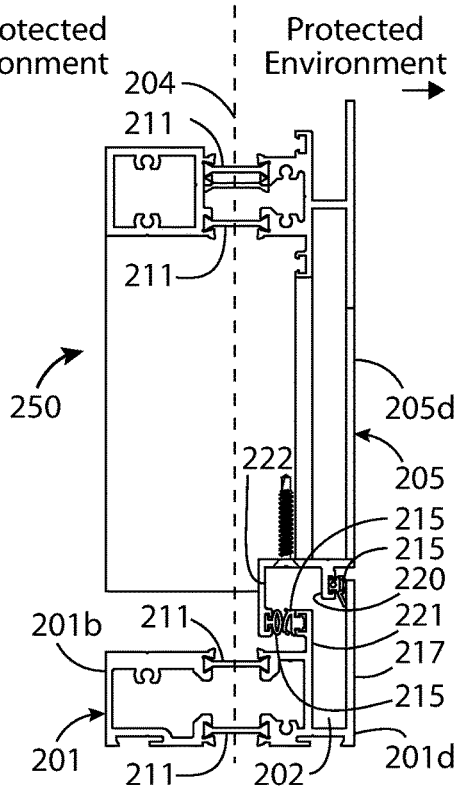

FIG. 40

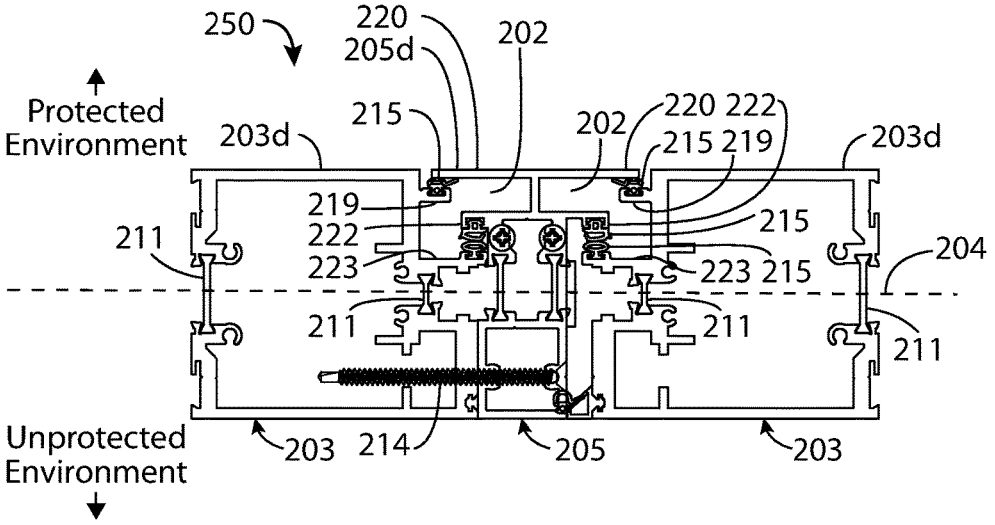

FIG. 41

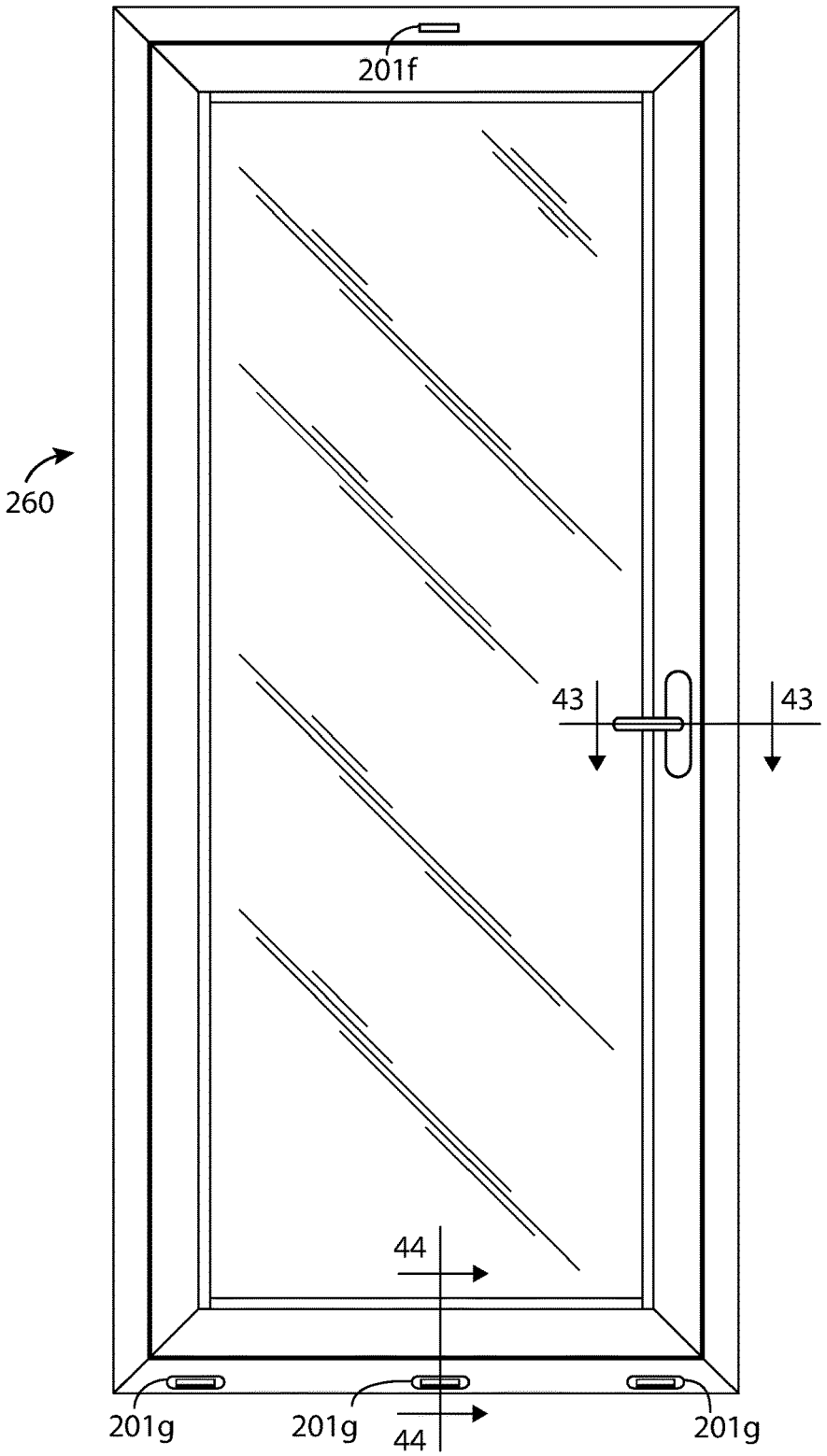

FIG. 42

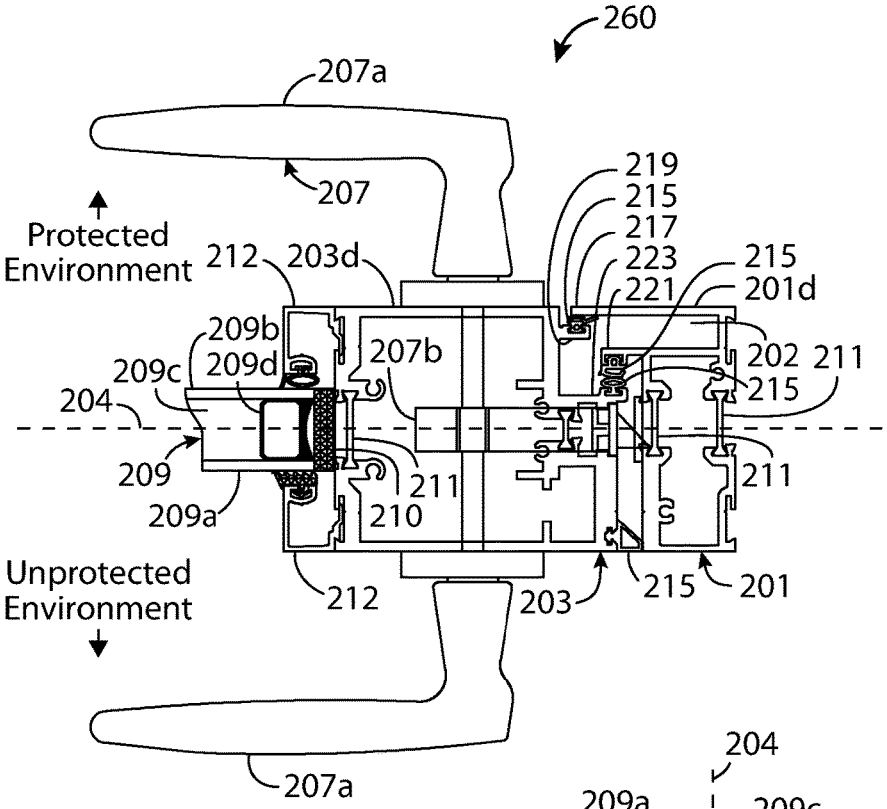
260
207a
207
Protected Environment
212
203d
219
215
217
223
221
215
201d
209b
209d
207b
202
211
209c
215
204
209
211
211
209a
210
Unprotected Environment
212
203
215
201
207a

FIG. 43

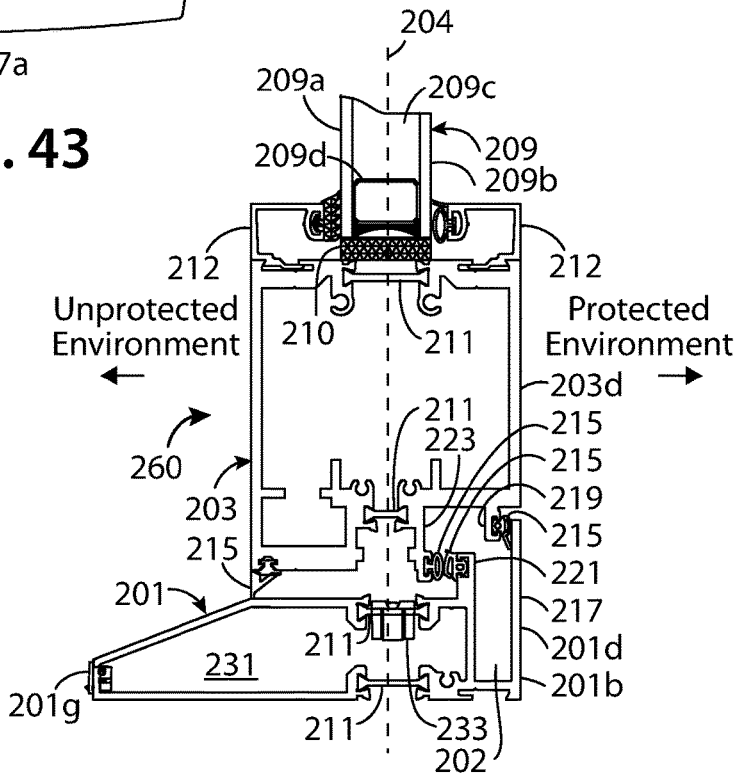
204
209a
209c
209d
209
209b
212
212
Unprotected Environment
210
211
Protected Environment
203d
211
223
215
260
215
203
219
215
215
221
201
217
211
201d
231
201b
201g
211
233
202

FIG. 44

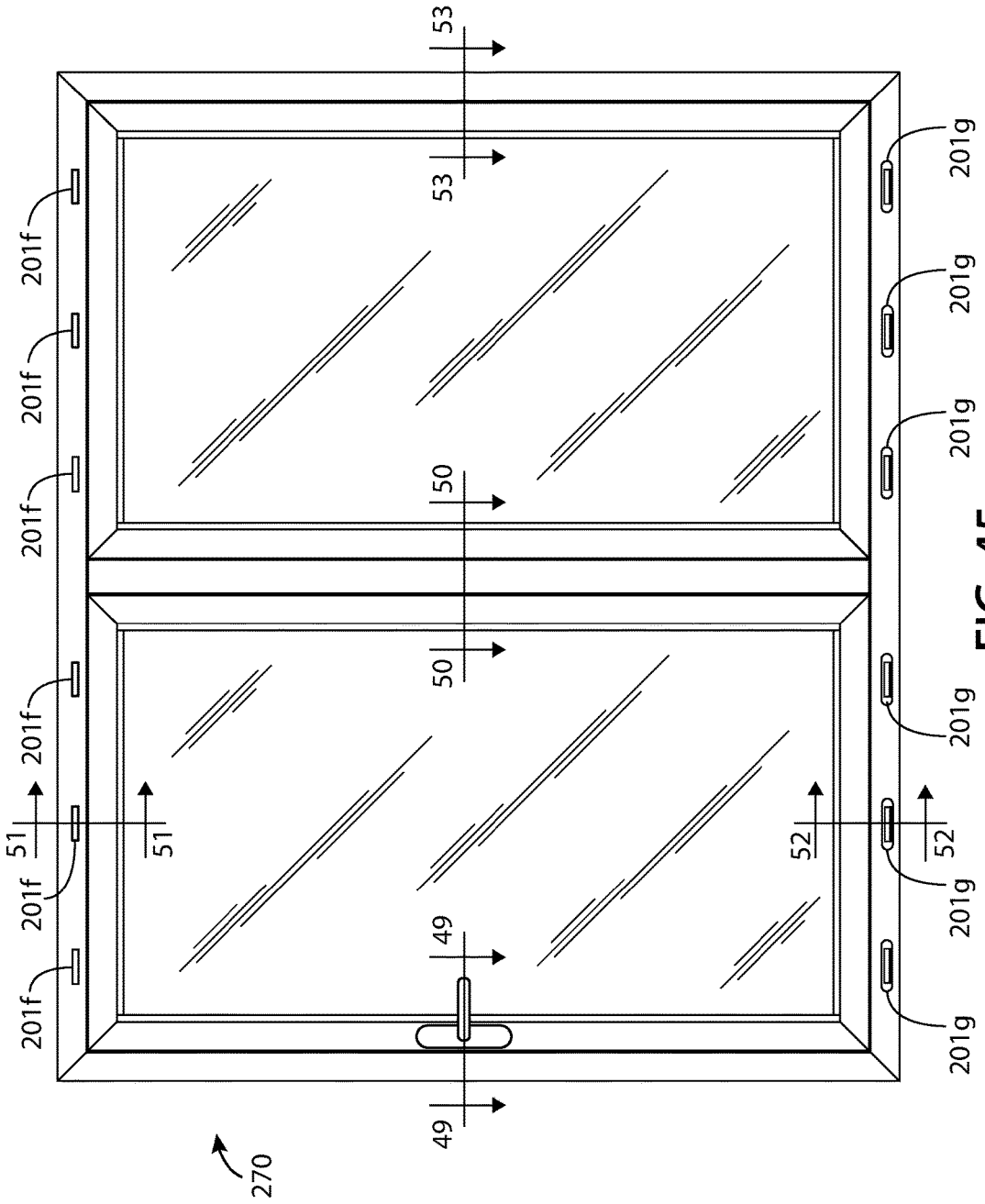
53
53
201f
201f
201f
50
50
201f
201f
51
51
201f
49
49
270
201g
201g
201g
201g
201g
52
52

FIG. 45

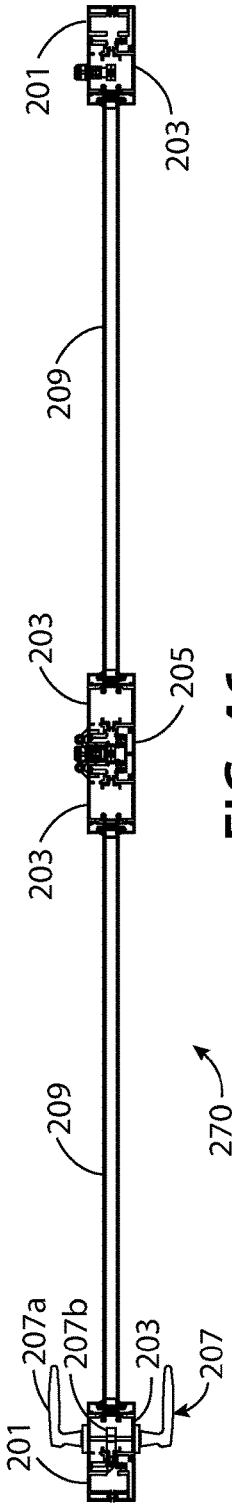
201
203
209
203
205
203
209
270
207a
207b
203
207
201

FIG. 46

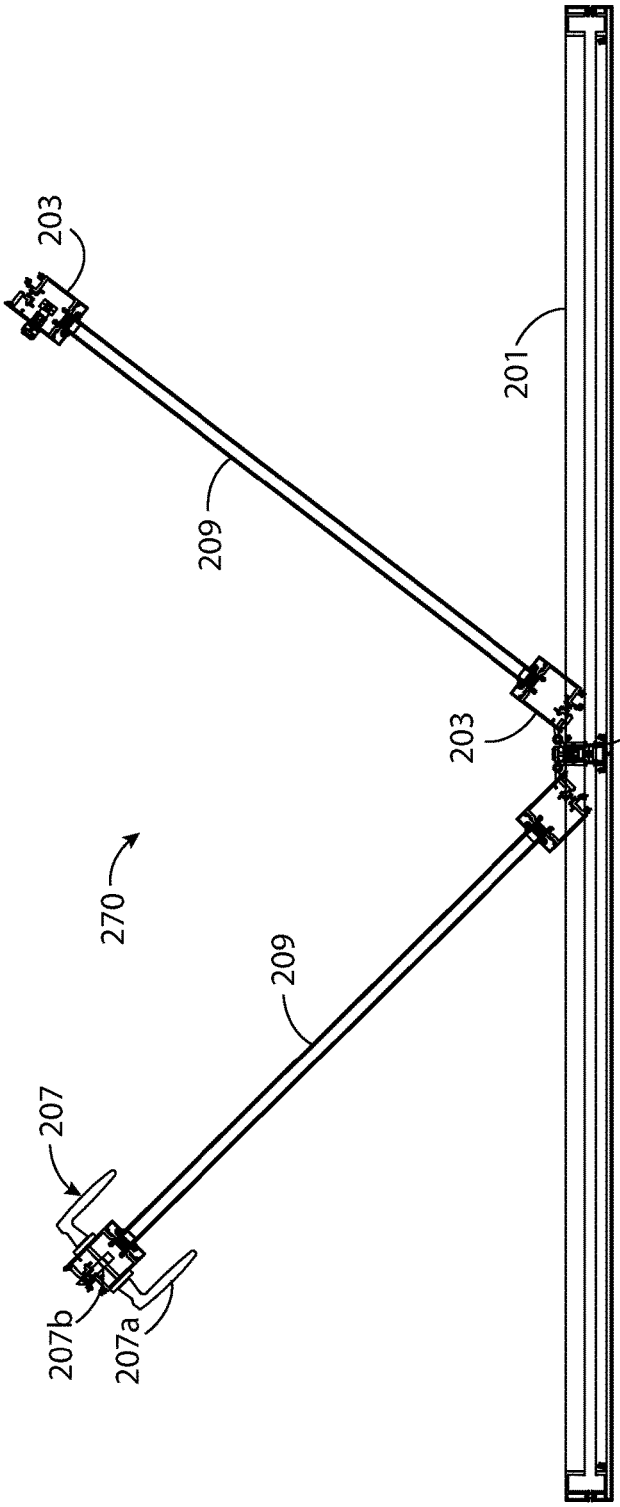
203
209
201
203
205
270
209
207
207b
207a

FIG. 47

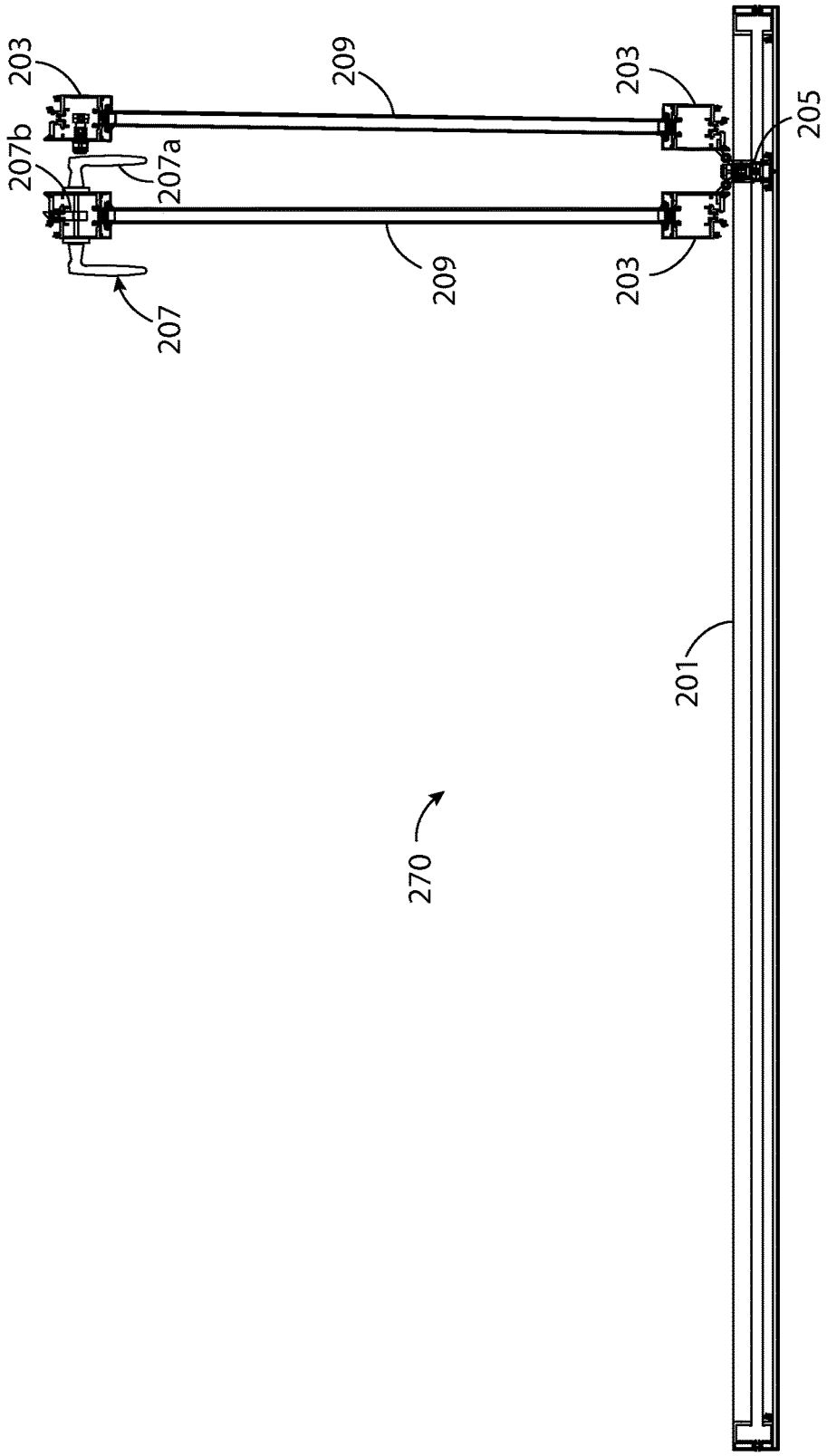

FIG. 48

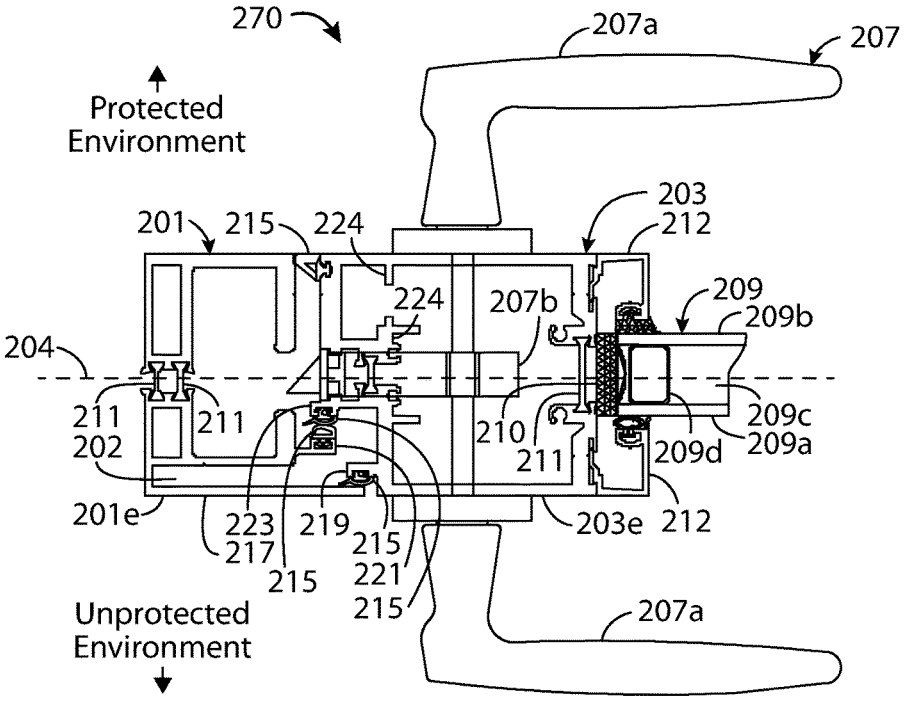
270
207a
207
Protected Environment
203
212
201
215
224
224
207b
209
209b
204
211
202
211
210
211
209c
209a
209d
201e
223
217
219
215
221
215
215
203e
212
Unprotected Environment
207a

FIG. 49

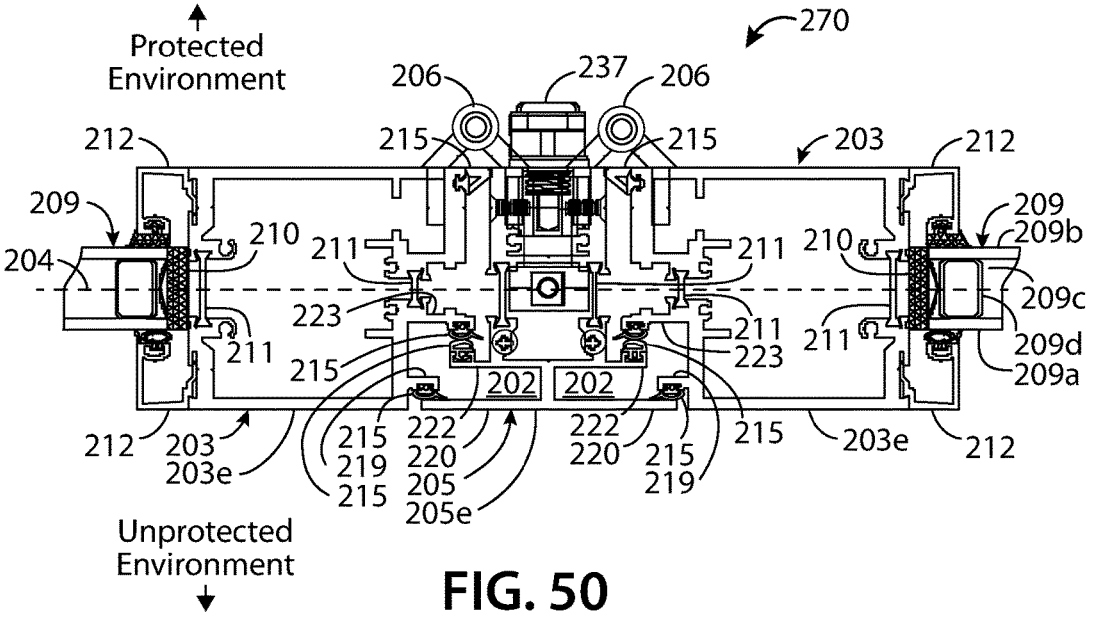
Protected Environment
270
206
237
206
212
215
215
203
212
209
210
211
211
210
209
209b
204
209c
223
211
211
223
211
209d
209a
215
202
202
212
203
203e
215
219
215
222
220
205
205e
222
220
215
219
215
203e
212
Unprotected Environment

FIG. 50

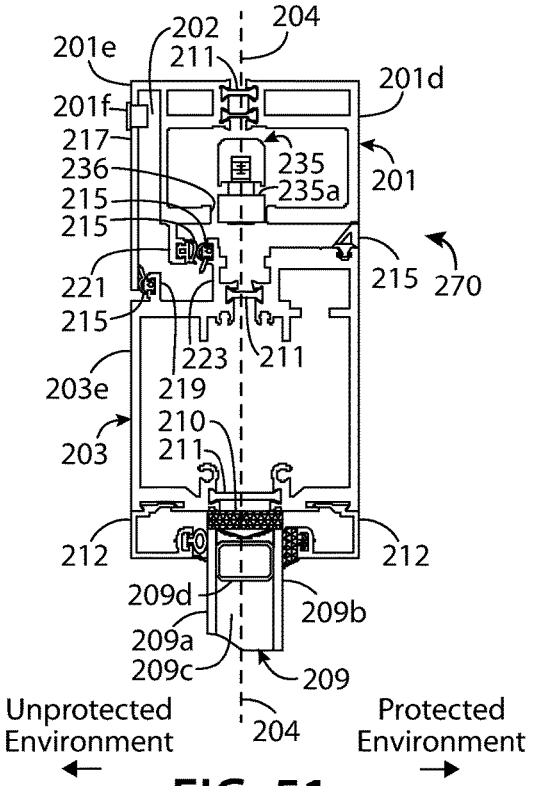

FIG. 51

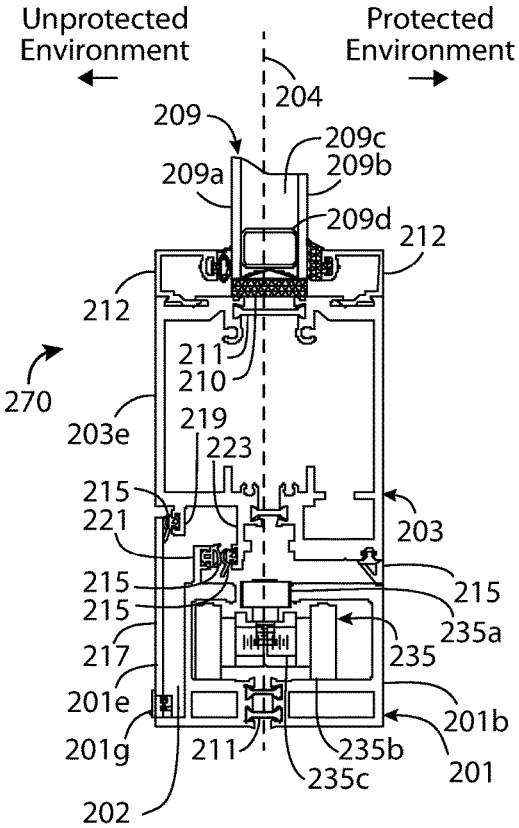

FIG. 52

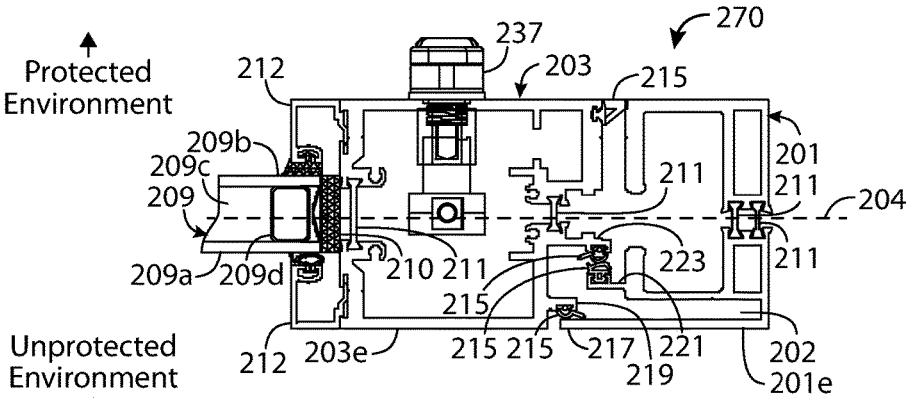

FIG. 53

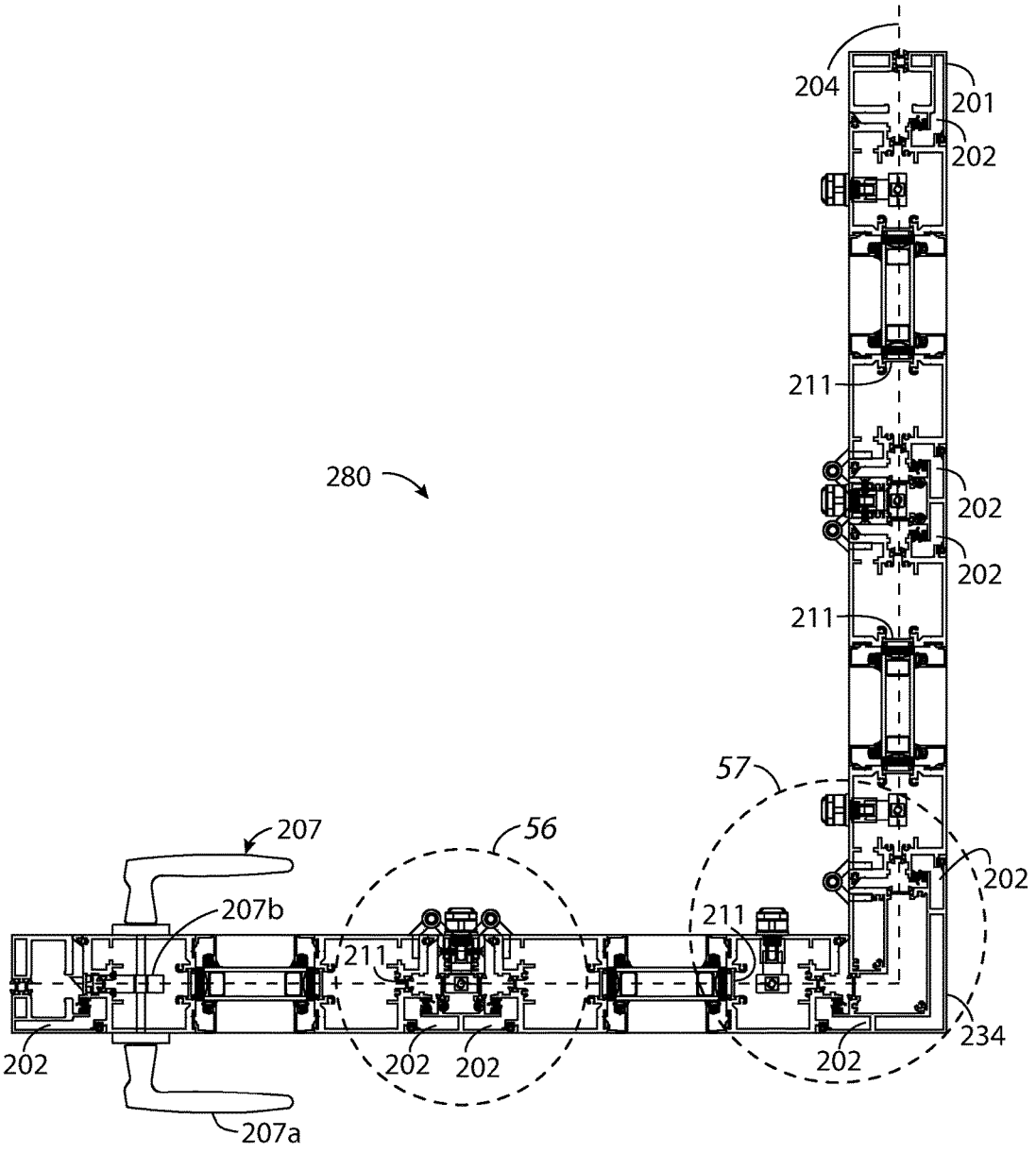
204
201
202
211
280
202
202
211
57
207
56
202
207b
211
211
234
202
202
202
202
207a

FIG. 54

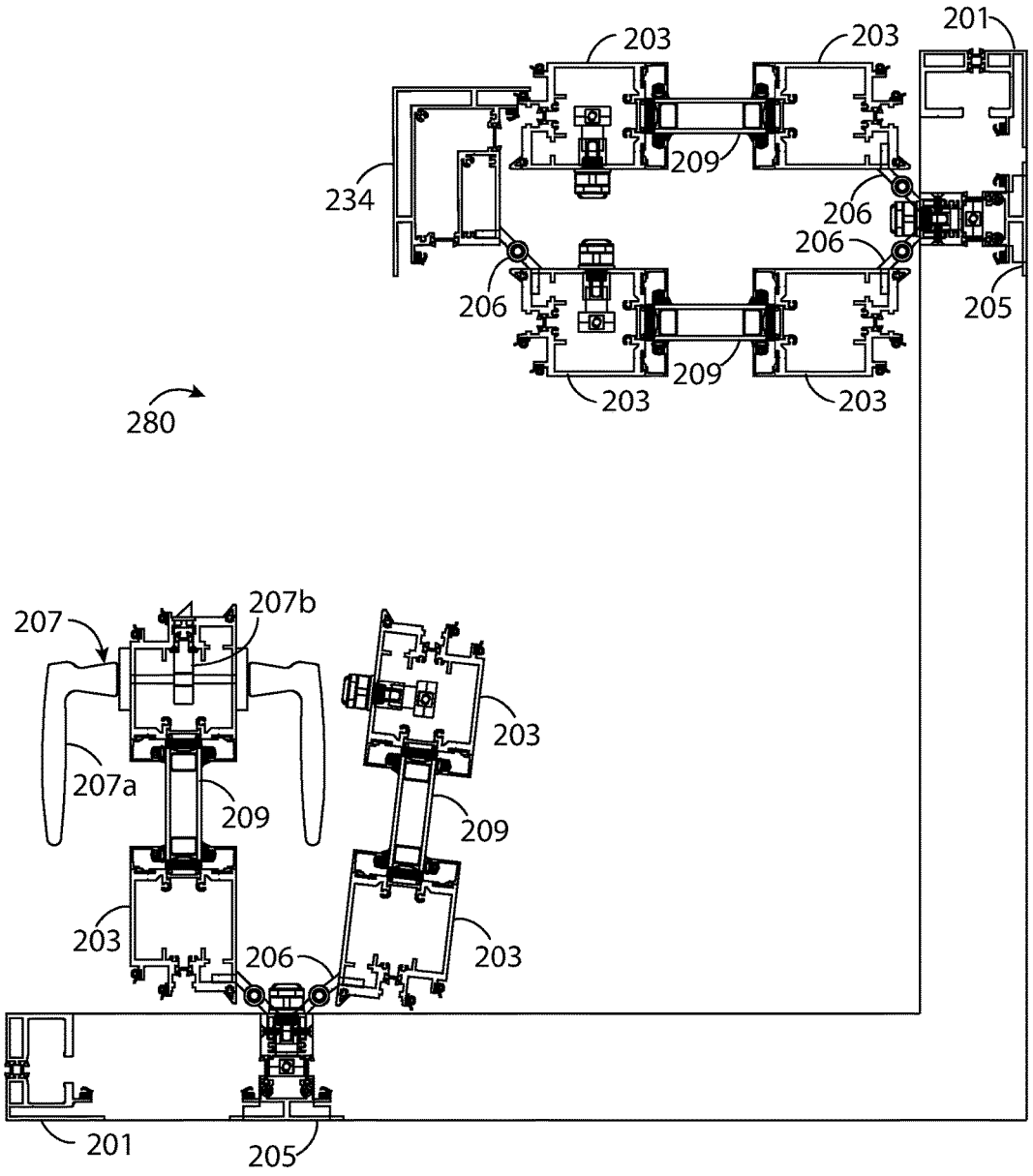
201
203
203
209
234
206
206
206
205
209
203
203
280
207
207b
203
207a
209
209
203
206
203
201
205

FIG. 55

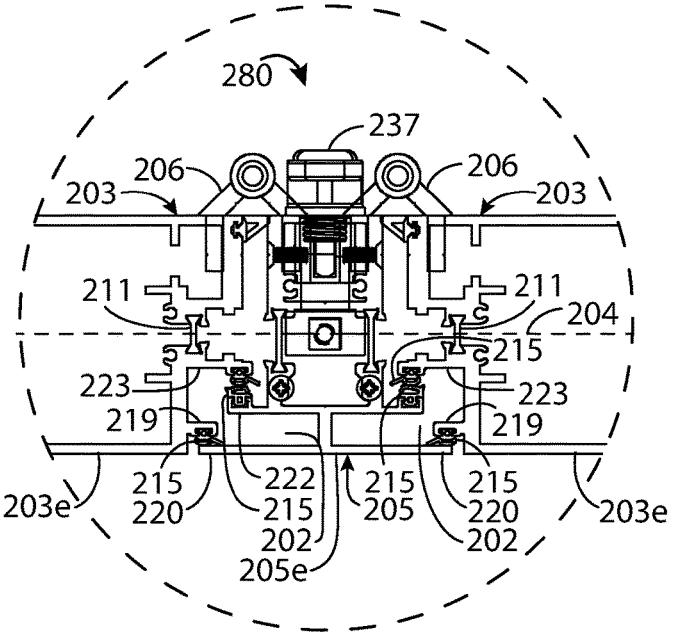
280
237
206
206
203
203
211
211
204
215
223
223
219
219
215
220
222
215
202
205e
215
205
215
220
202
203e
203e

FIG. 56

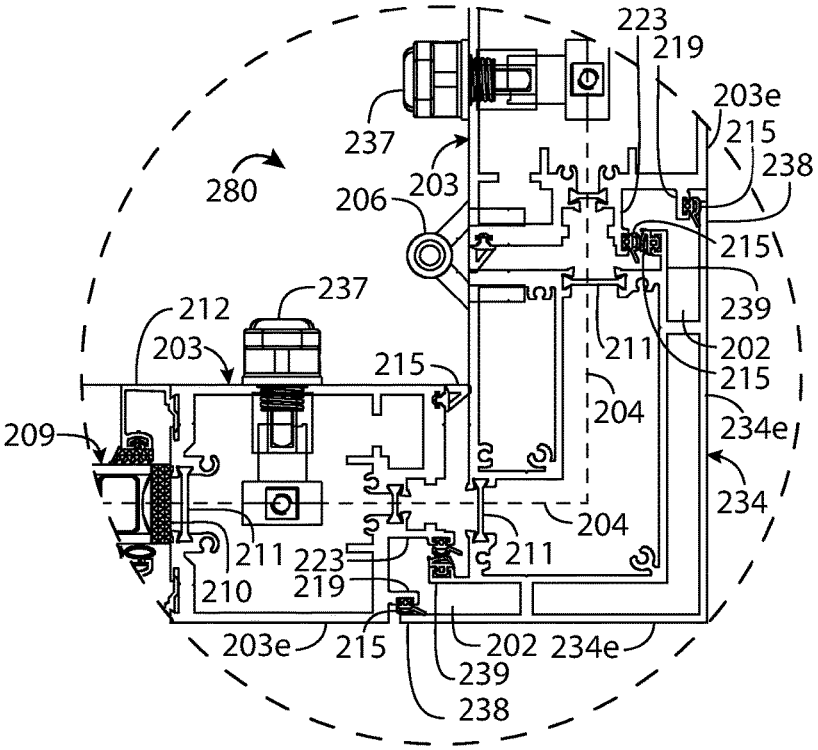
223
219
203e
215
238
237
280
203
206
215
239
237
212
203
215
211
202
215
204
209
234e
234
204
211
223
211
210
219
203e
215
202
234e
239
238

FIG. 57

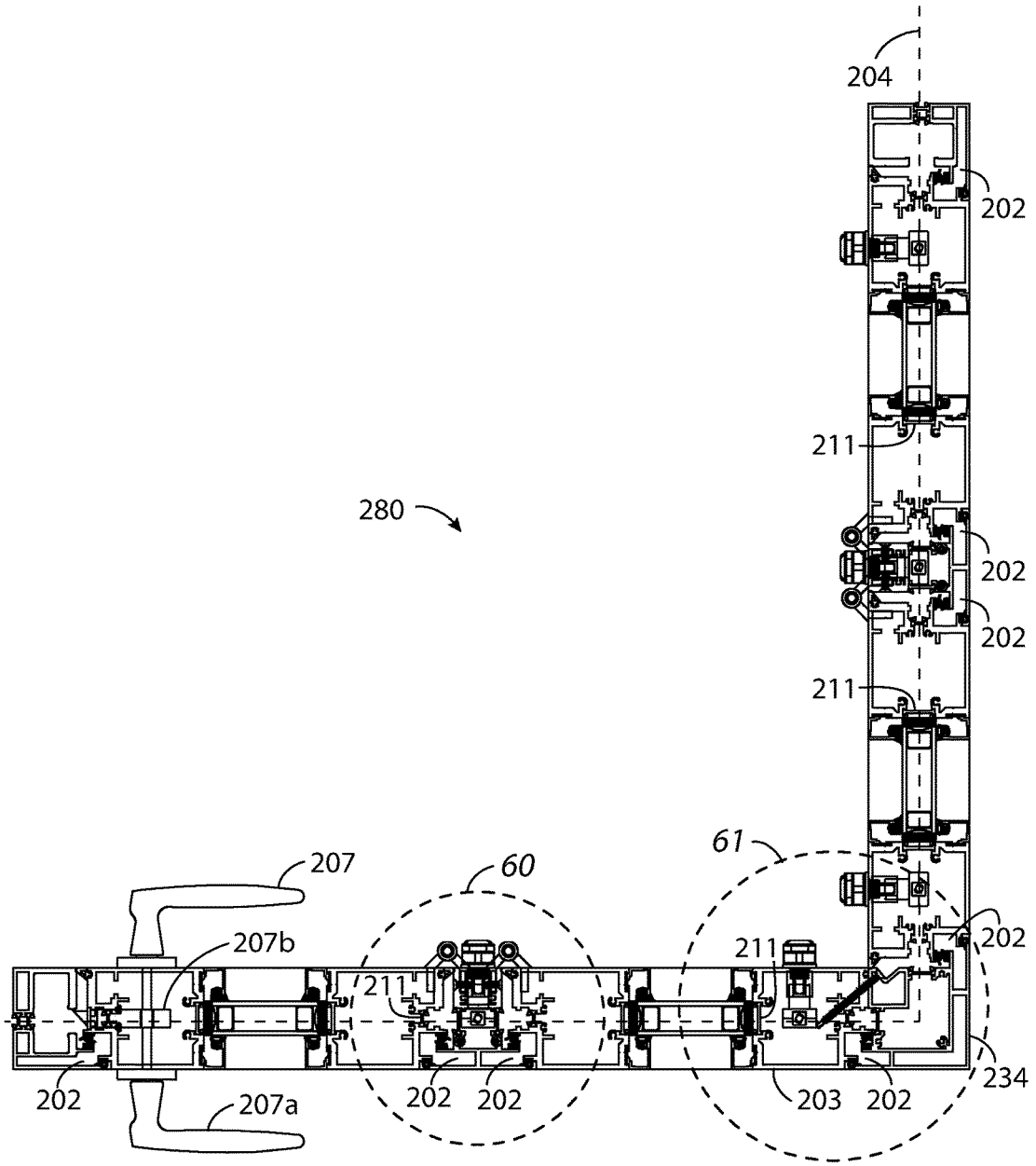
204
202
211
280
202
202
211
61
207
60
207b
211
211
202
202
202
202
203
202
234
207a

FIG. 58

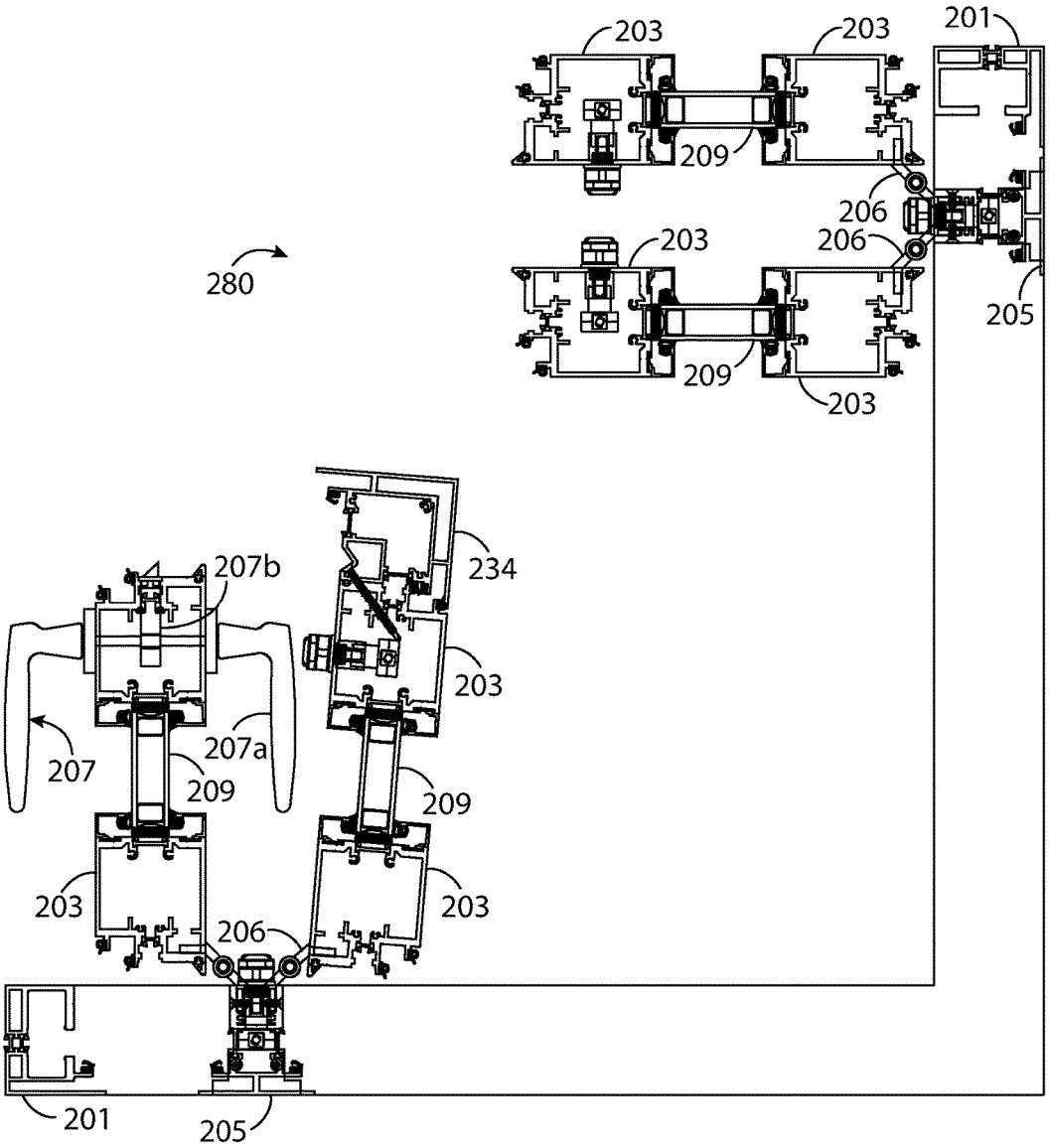
203
203
201
209
206
203
206
280
205
209
203
207b
234
203
207a
207
209
209
203
203
206
201
205

FIG. 59

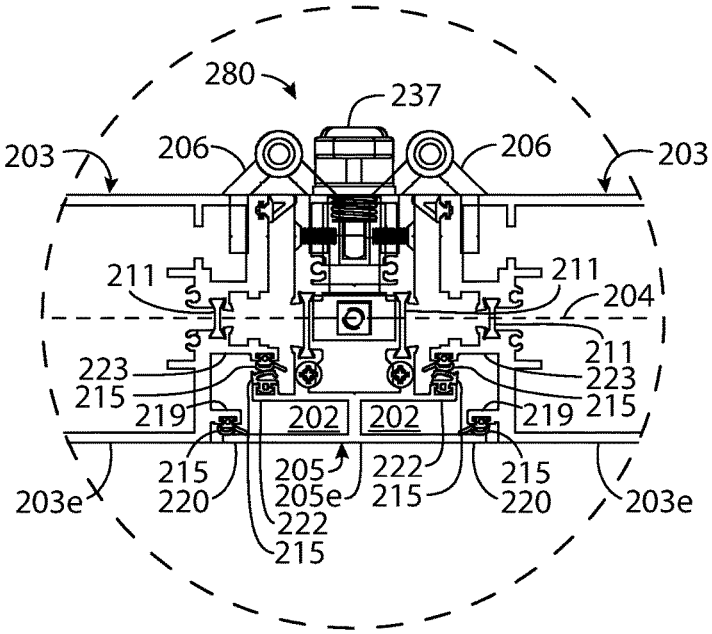
280
237
203
206
206
203
211
211
204
211
223
215
223
215
219
202
202
219
215
220
205
205e
222
215
222
215
215
220
203e
203e

FIG. 60

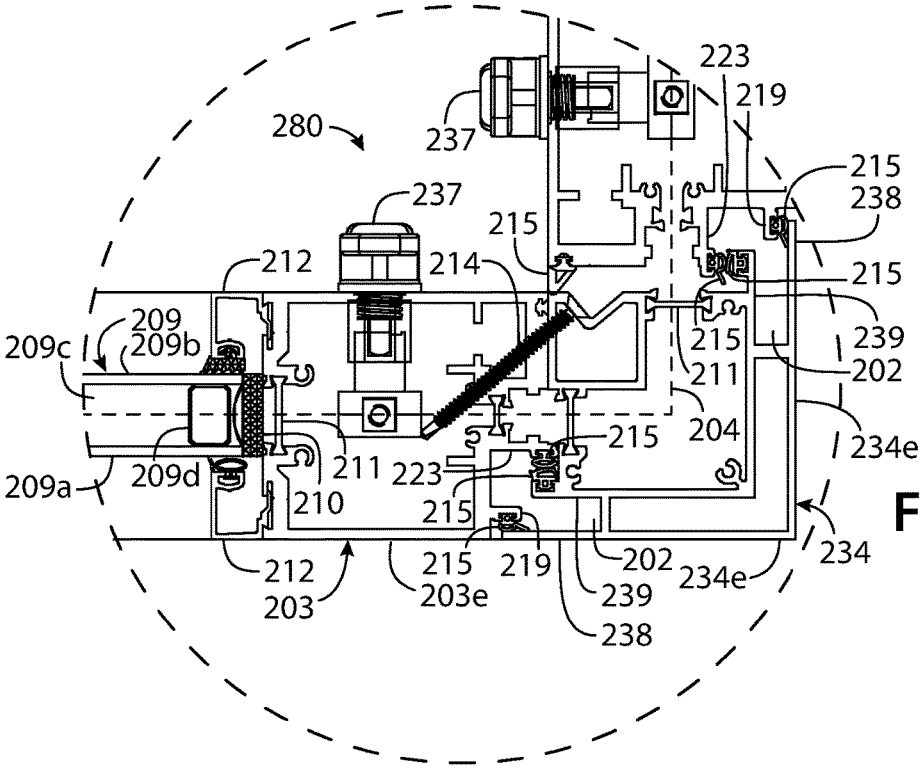
223
219
280
237
215
238
237
215
212
214
215
209
209b
209c
215
239
215
211
202
204
234e
209a
209d
211
223
210
215
215
219
202
234
212
203
203e
239
234e
238

FIG. 61

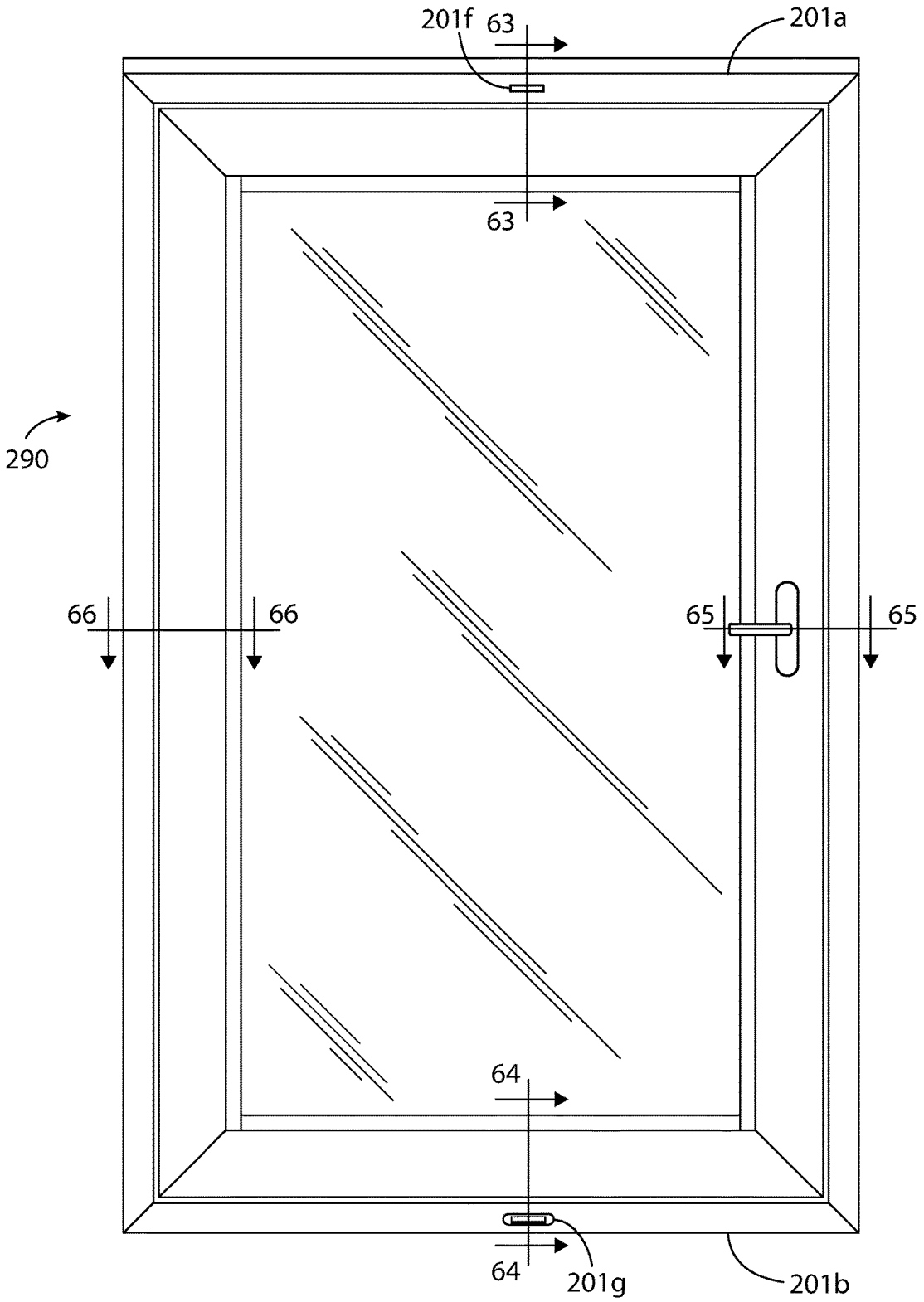

FIG. 62

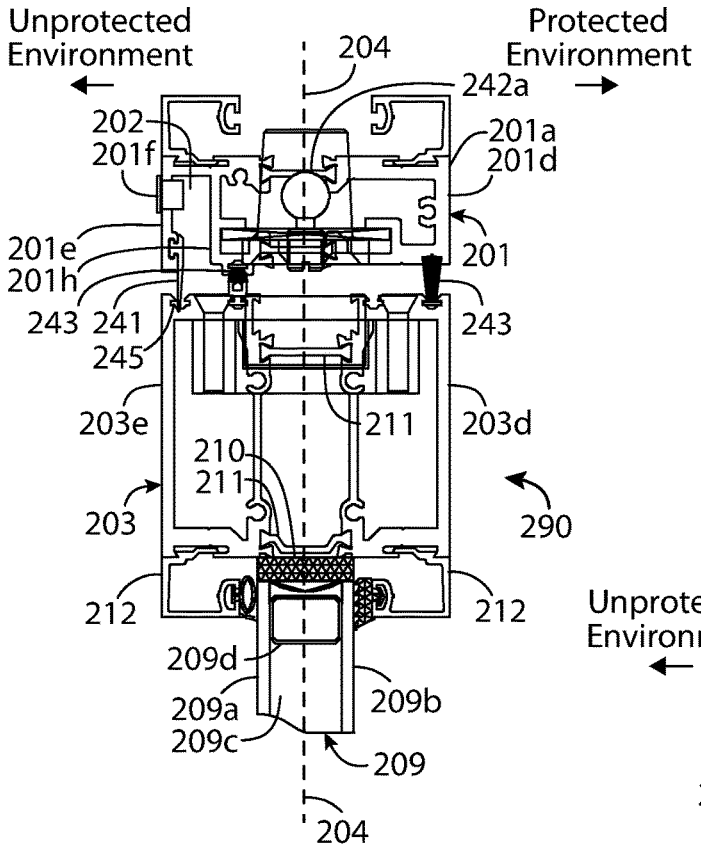
Unprotected Environment
Protected Environment
204
242a
202
201f
201a
201d
201e
201h
201
243
241
245
243
203e
211
203d
210
211
203
290
212
212
209d
209a
209c
209b
209
204

FIG. 63

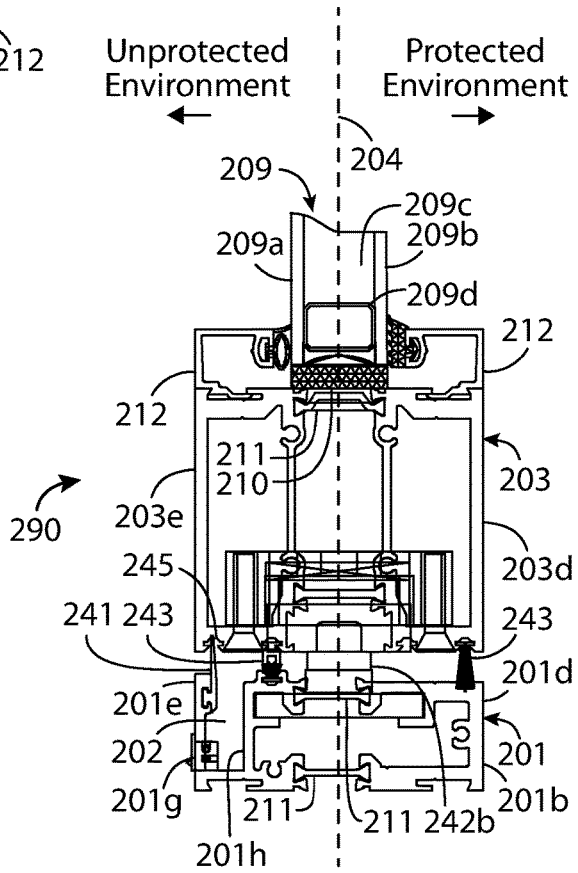
Unprotected Environment
Protected Environment
209
204
209c
209b
209a
209d
212
212
211
210
203
290
203e
203d
245
241 243
243
201d
201e
202
201
201g
211
211 242b
201b
201h

FIG. 64

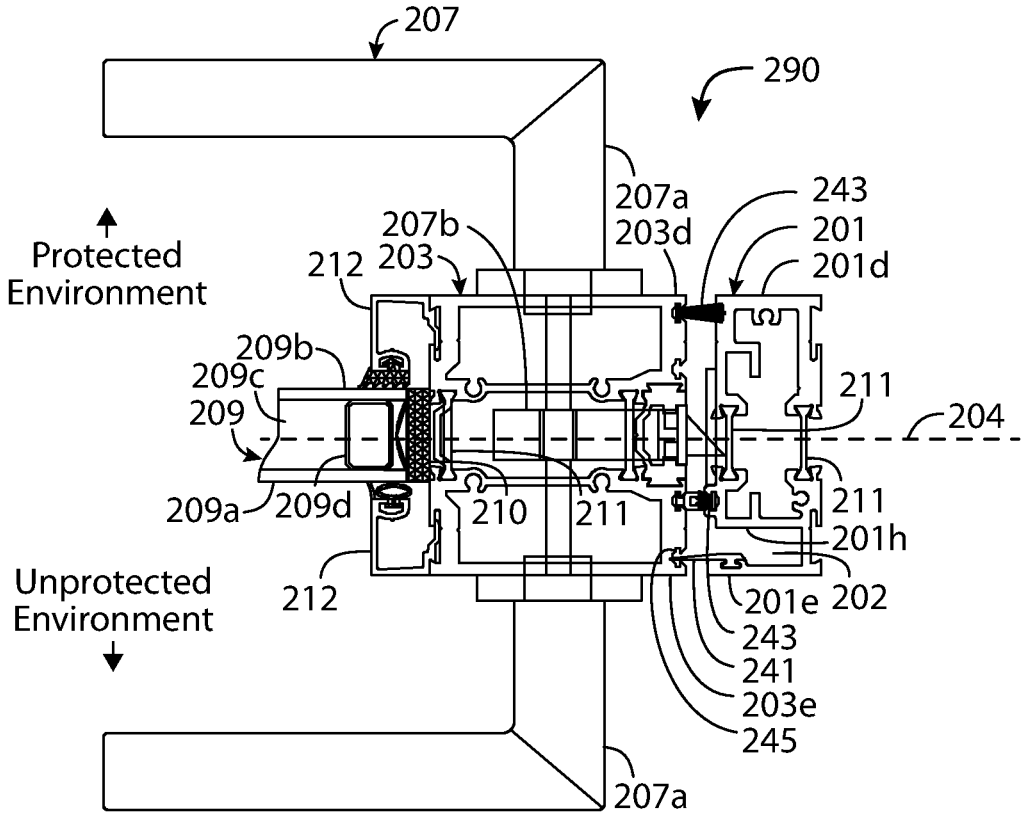
207
290
207a
203d
243
201
201d
207b
203
212
Protected
Environment
209b
209c
209
211
204
209a
209d
210
211
211
201h
212
Unprotected
Environment
201e
202
243
241
203e
245
207a

FIG. 65

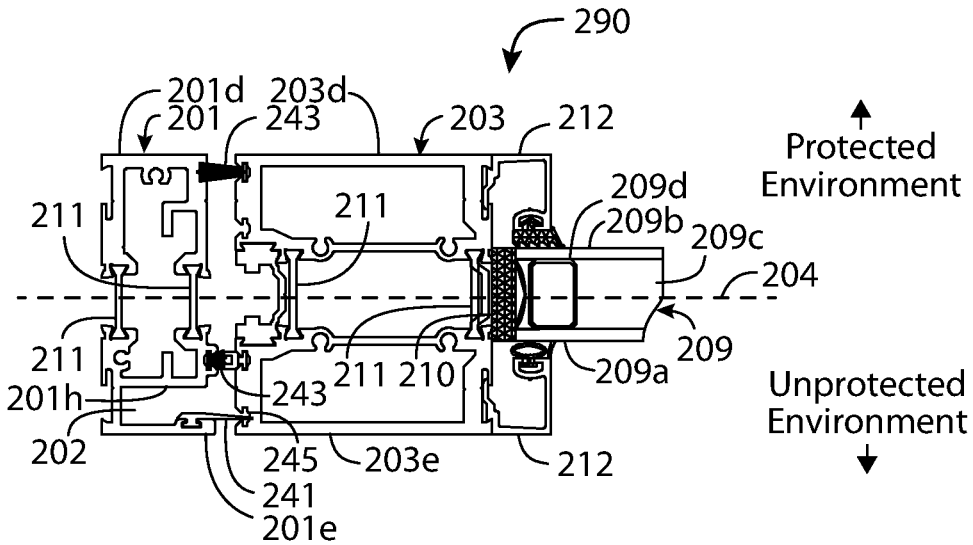
290
201d
203d
201
243
203
212
Protected
Environment
211
211
209d
209b
209c
204
211
211 210
209
209a
201h
243
Unprotected
Environment
202
245
203e
212
241
201e

FIG. 66

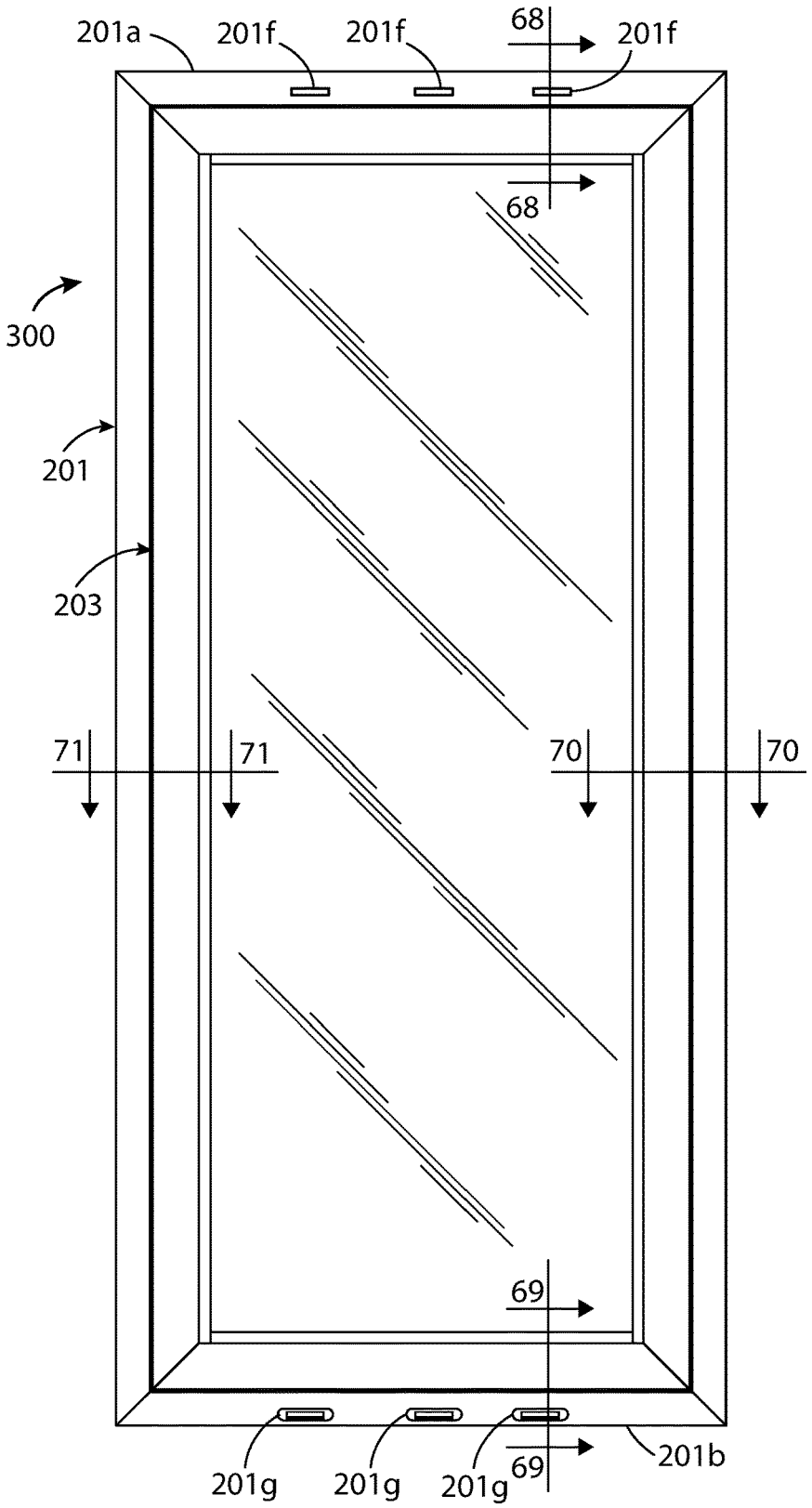
201a
201f
201f
68
201f
68
300
201
203
71
71
70
70
69
69
201g
201g
201g
201b

FIG. 67

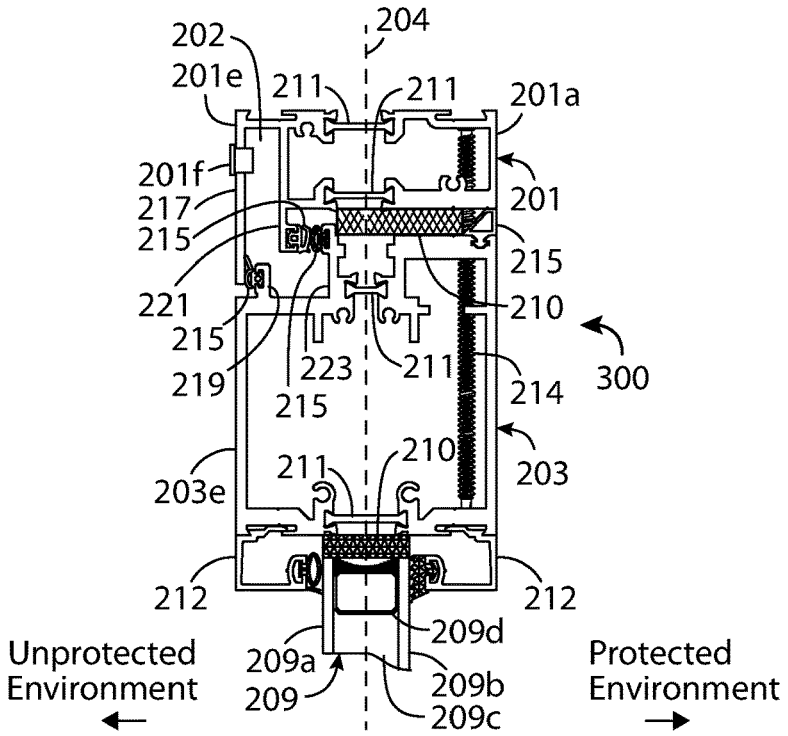
204
202
201e
211
211
201a
201f
217
215
201
215
221
215
210
215
223
211
300
219
215
214
203
211
210
203e
212
212
209d
Unprotected Environment
209a
209
209b
209c
Protected Environment

FIG. 68

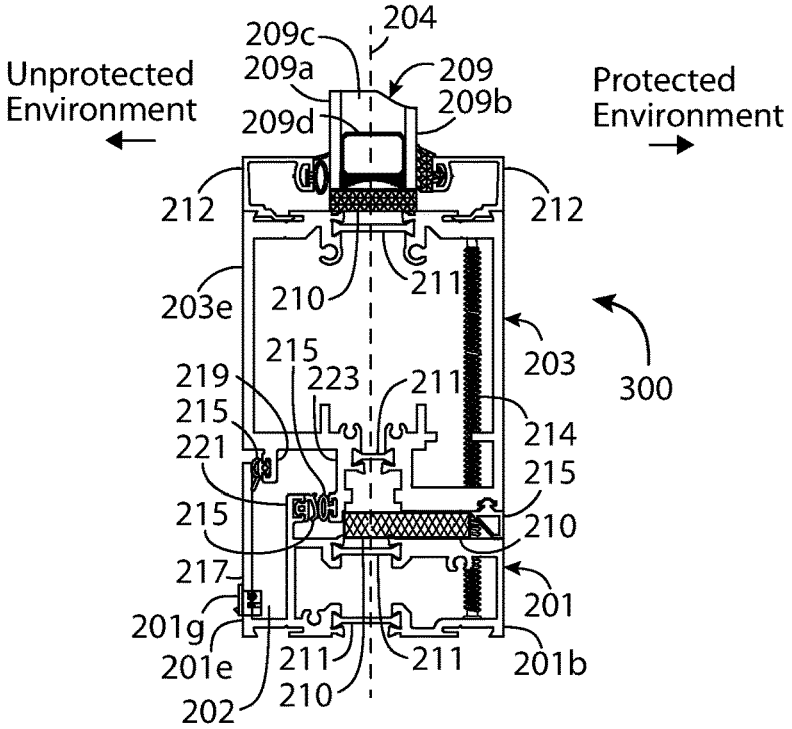
204
209c
209a
209
209b
Unprotected Environment
209d
Protected Environment
212
212
203e
210
211
203
300
215
219
223
211
215
214
221
215
215
210
217
201
201g
201e
211
211
201b
202
210

FIG. 69

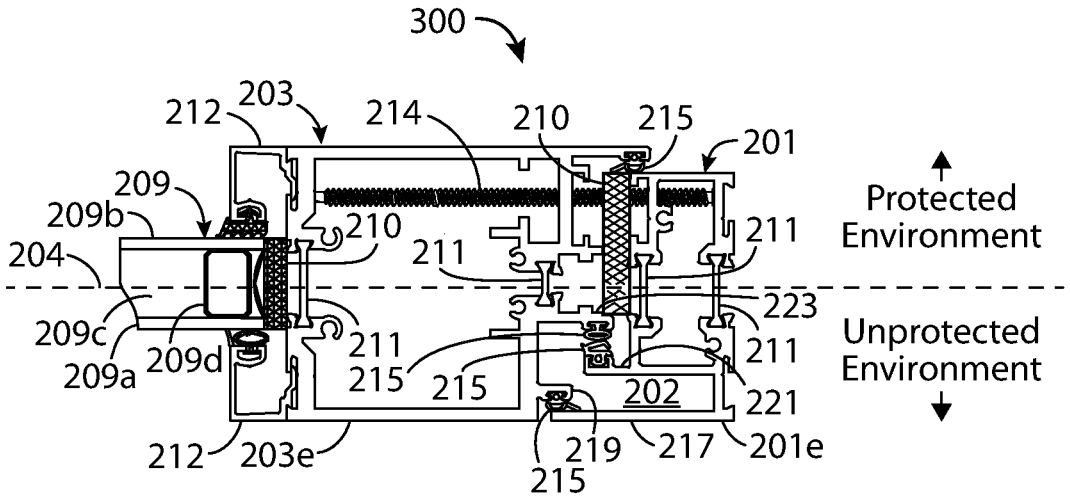
300
212
203
214
210
215
201
209
209b
210
211
211
204
223
209c
209d
211
211
209a
215
215
202
221
212
203e
219
217
201e
215
Protected Environment
Unprotected Environment

FIG. 70

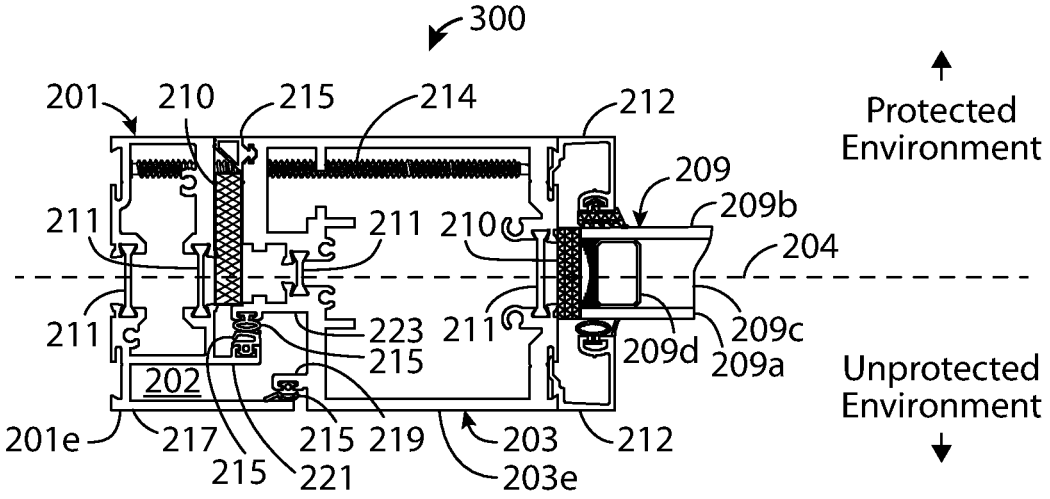
300
201
210
215
214
212
209
209b
211
211
210
204
211
223
211
209c
215
209d
209a
202
201e
217
215
219
203
212
215
221
203e
Protected Environment
Unprotected Environment

FIG. 71