United States Patent [19]

Kobayashi et al.

[11] **Patent Number: 5,022,454**

[45] **Date of Patent: Jun. 11, 1991**

[54] **MULTI-PANEL COLLAPSIBLE DOOR ASSEMBLY HAVING A DOOR STORAGE SYSTEM**

[75] Inventors: **Mitsuru Kobayashi**, Komagane; **Keishirou Hori**, Ina, both of Japan

[73] Assignee: **Toyo Exterior Kabushiki Kaisha**, Tokyo, Japan

[21] Appl. No.: **429,365**

[22] Filed: **Oct. 31, 1989**

[30] **Foreign Application Priority Data**

Aug. 31, 1989 [JP] Japan 1-225051

[51] **Int. Cl.**[5] **E05D 15/00**

[52] **U.S. Cl.** **160/202**; 160/197; 49/125; 49/127

[58] **Field of Search** 160/202, 196.1, 197, 160/199, 211, 221, 223, 26, 32, 33, 188, 201; 52/64, 71; 49/125, 127, 128

[56] **References Cited**

U.S. PATENT DOCUMENTS

1,960,860	5/1934	Allen	160/196.1 X
3,071,825	1/1963	Ferris	160/196.1 X
3,334,375	8/1967	Hubbard	49/127 X
3,394,496	7/1968	Pulaski	49/127
4,569,164	2/1986	Dickson	160/196.1 X

FOREIGN PATENT DOCUMENTS

61-40985 2/1986 Japan .

64-6484 1/1989 Japan .

Primary Examiner—David M. Purol

Attorney, Agent, or Firm—Wenderoth, Lind & Ponack

[57] **ABSTRACT**

A collapsible double door assembly includes a number of serially connected panels each provided with a pair of inwardly and outwardly deviated pivotal suspension rollers, a horizontal guide rail constituted by an inner rail member and an outer rail member arranged in parallel in close proximity for separately guiding the suspension rollers, and one or two door storage areas extending perpendicularly from the guide rail at one or both ends thereof and formed by separating and independently bending the two rail members with different radiuses of curvature each defining an arc of a quarter of a circle. The radius of curvature of the outer rail member is relatively greater than that of the inner rail member. The distance between the two rail members in a door storage area is slightly smaller than the distance between the two suspension rollers of a panel. With such an arrangement, each panel of the double doors can be freely twisted by independently varying the angle of pivotal movement of each of the suspension rollers of the panel. Consequently, the panels can be moved into or pulled out of the storage areas very smoothly, particularly because the panels are stored in the storage areas in a slightly twisted state.

5 Claims, 7 Drawing Sheets

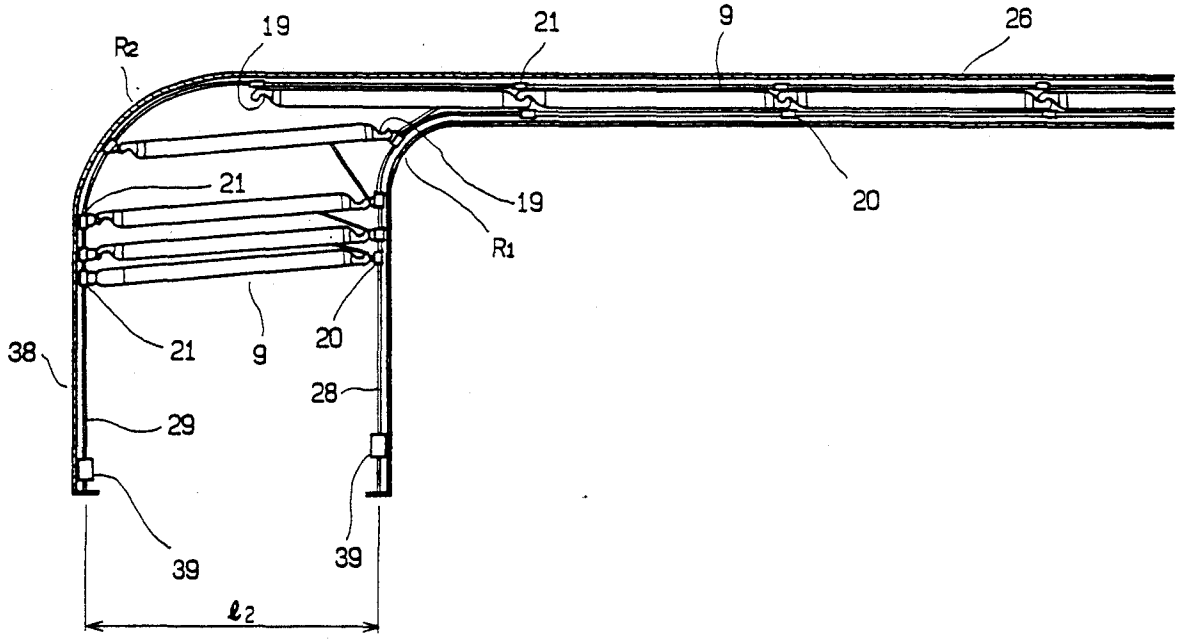

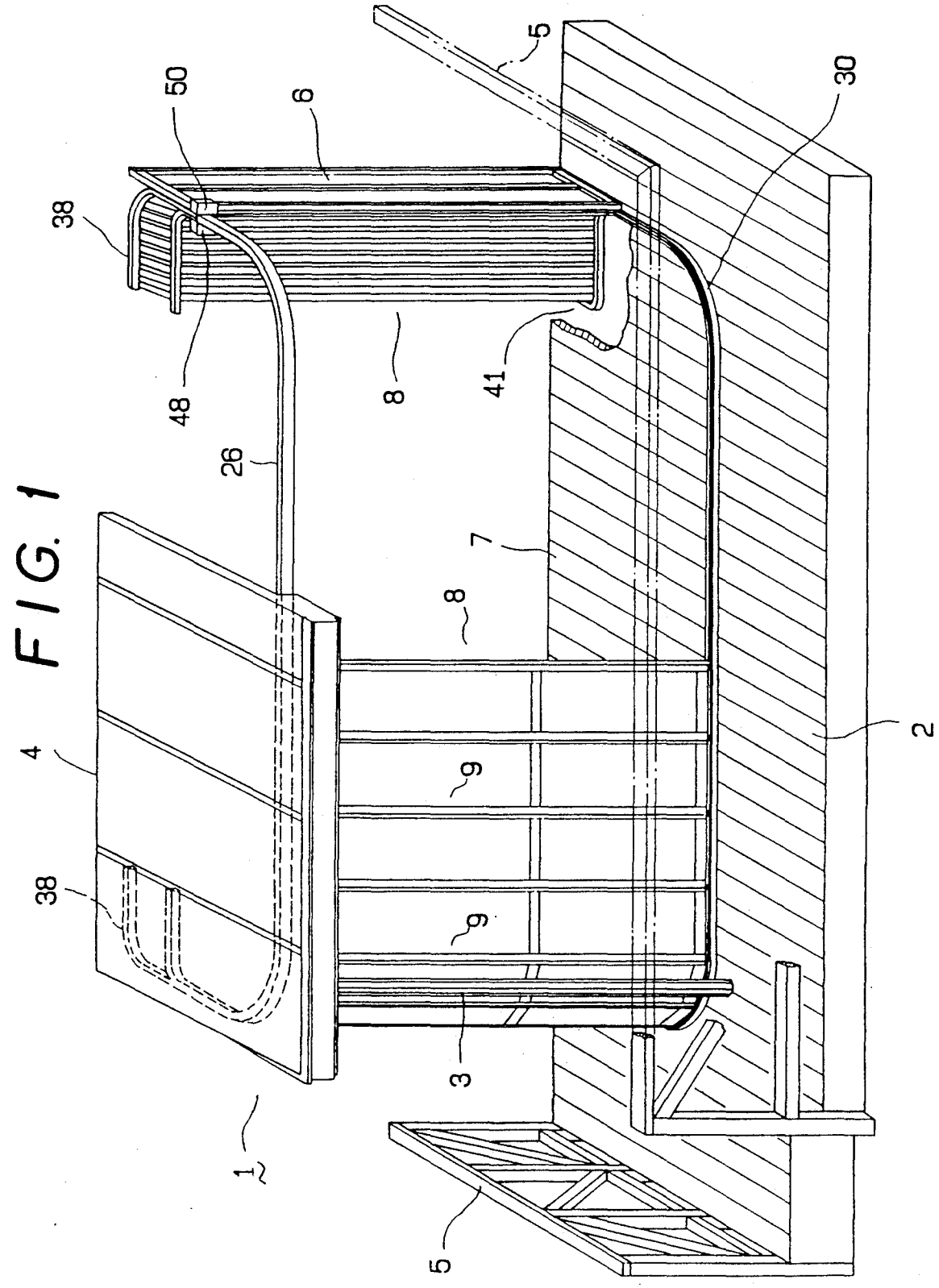

FIG. 1

FIG. 2

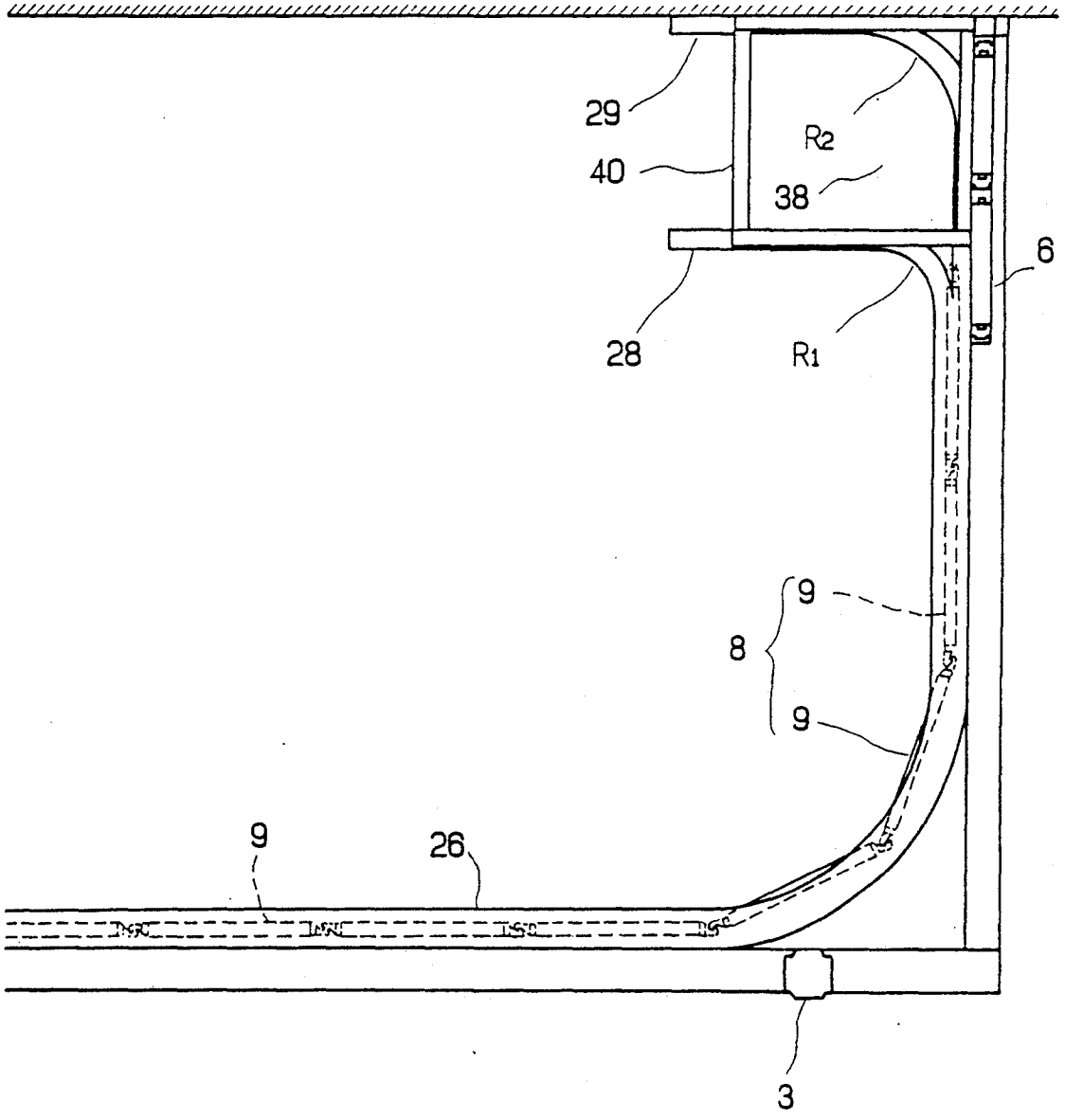

FIG. 3

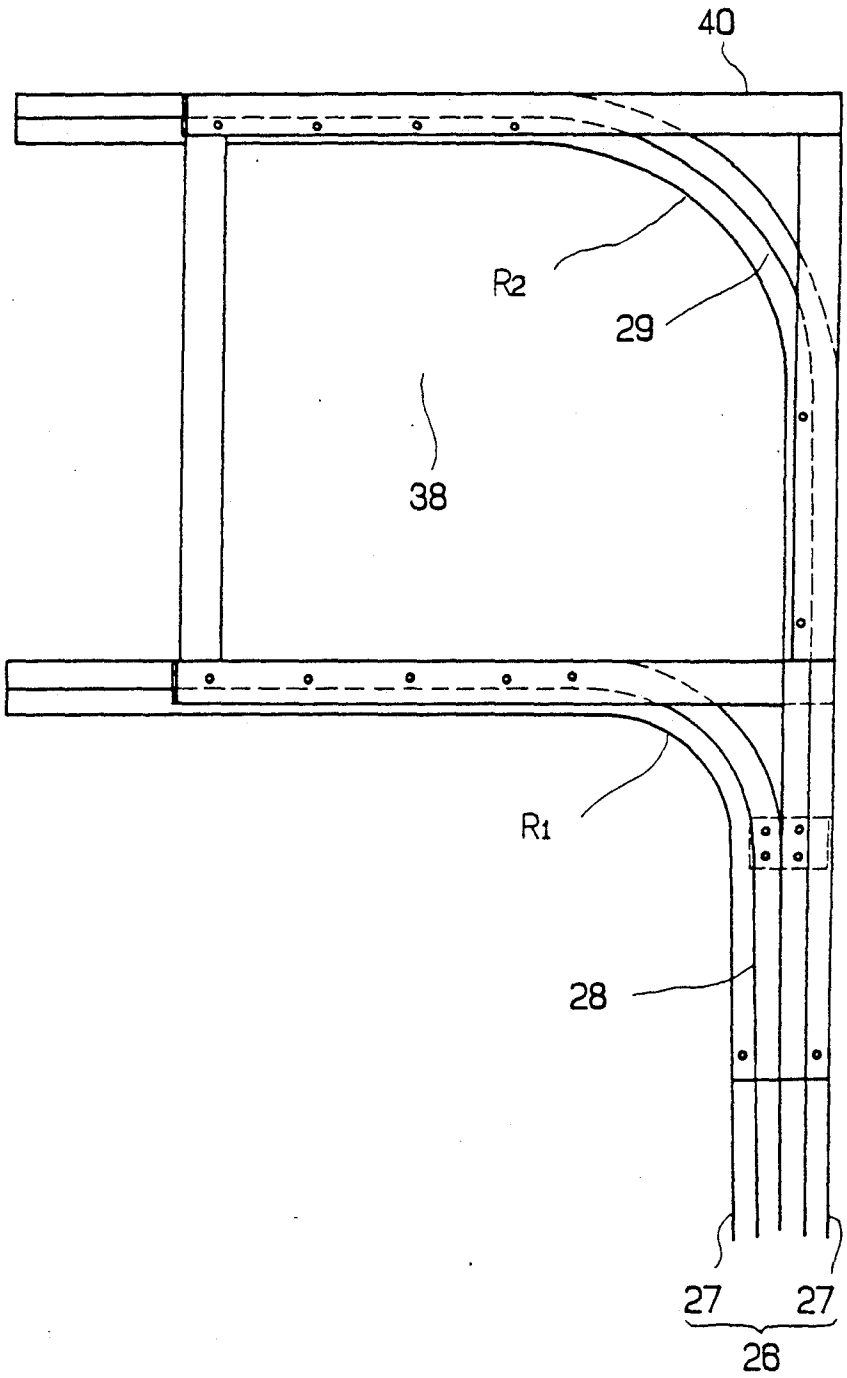

FIG. 4

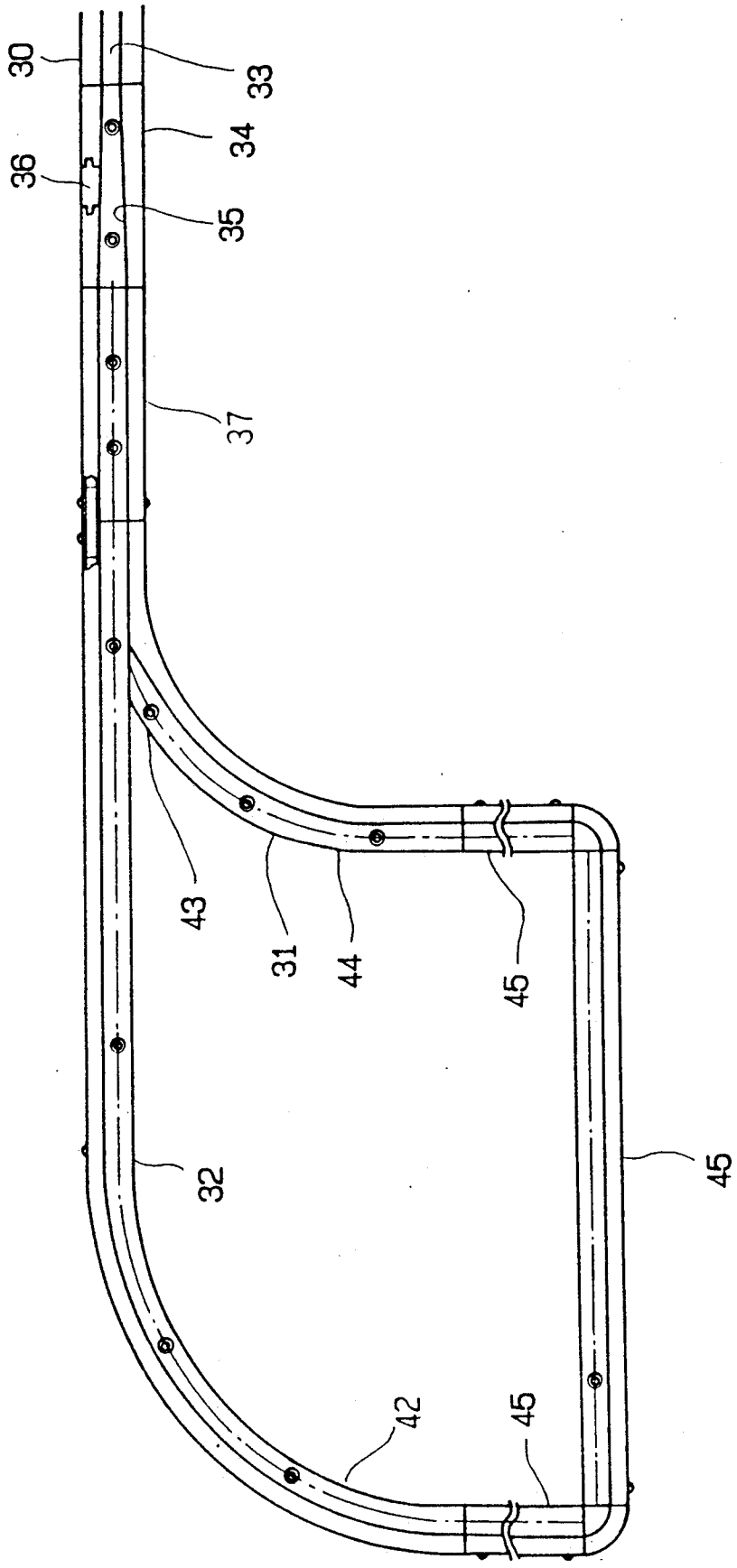

FIG. 5

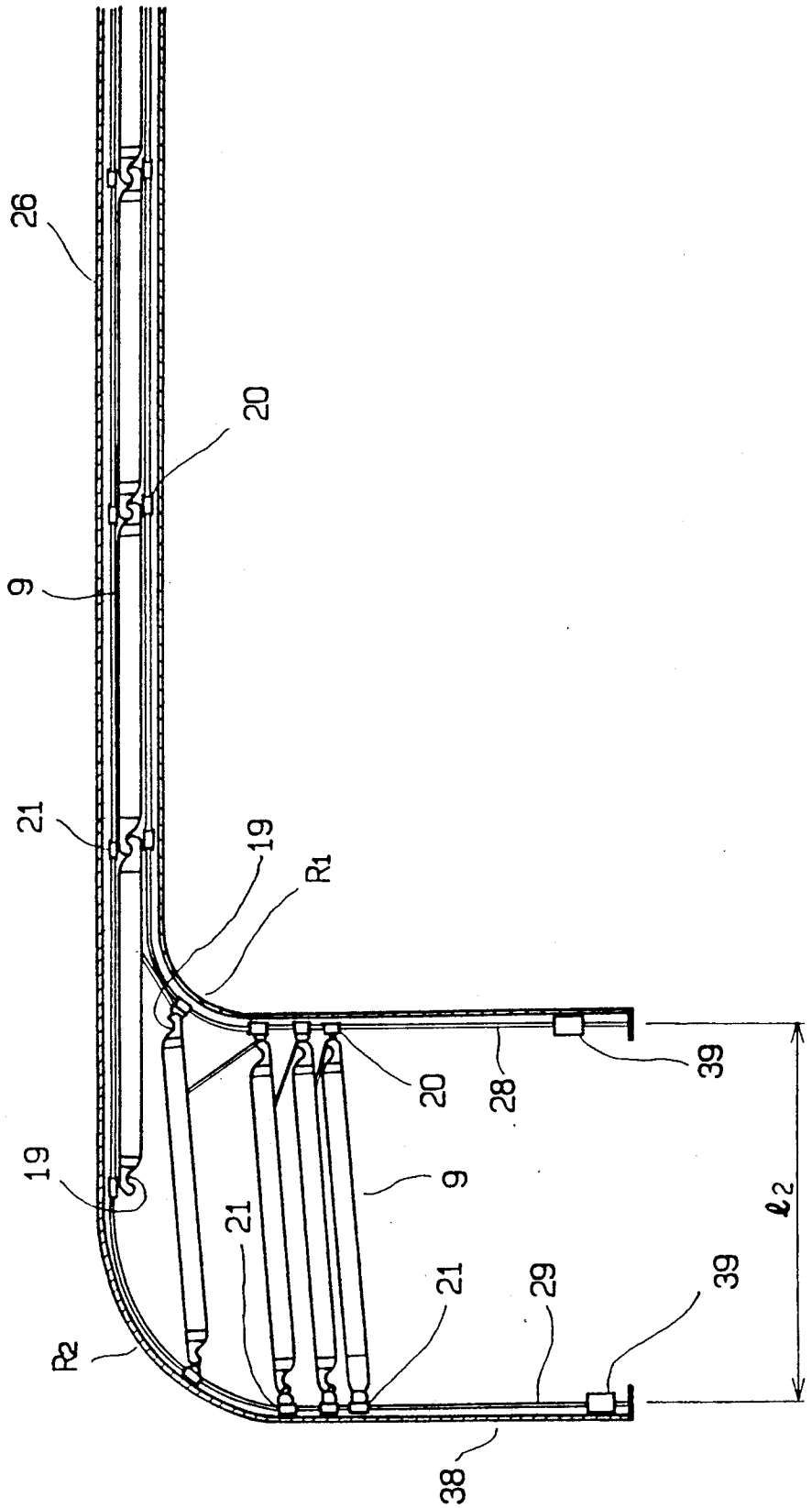

FIG. 6

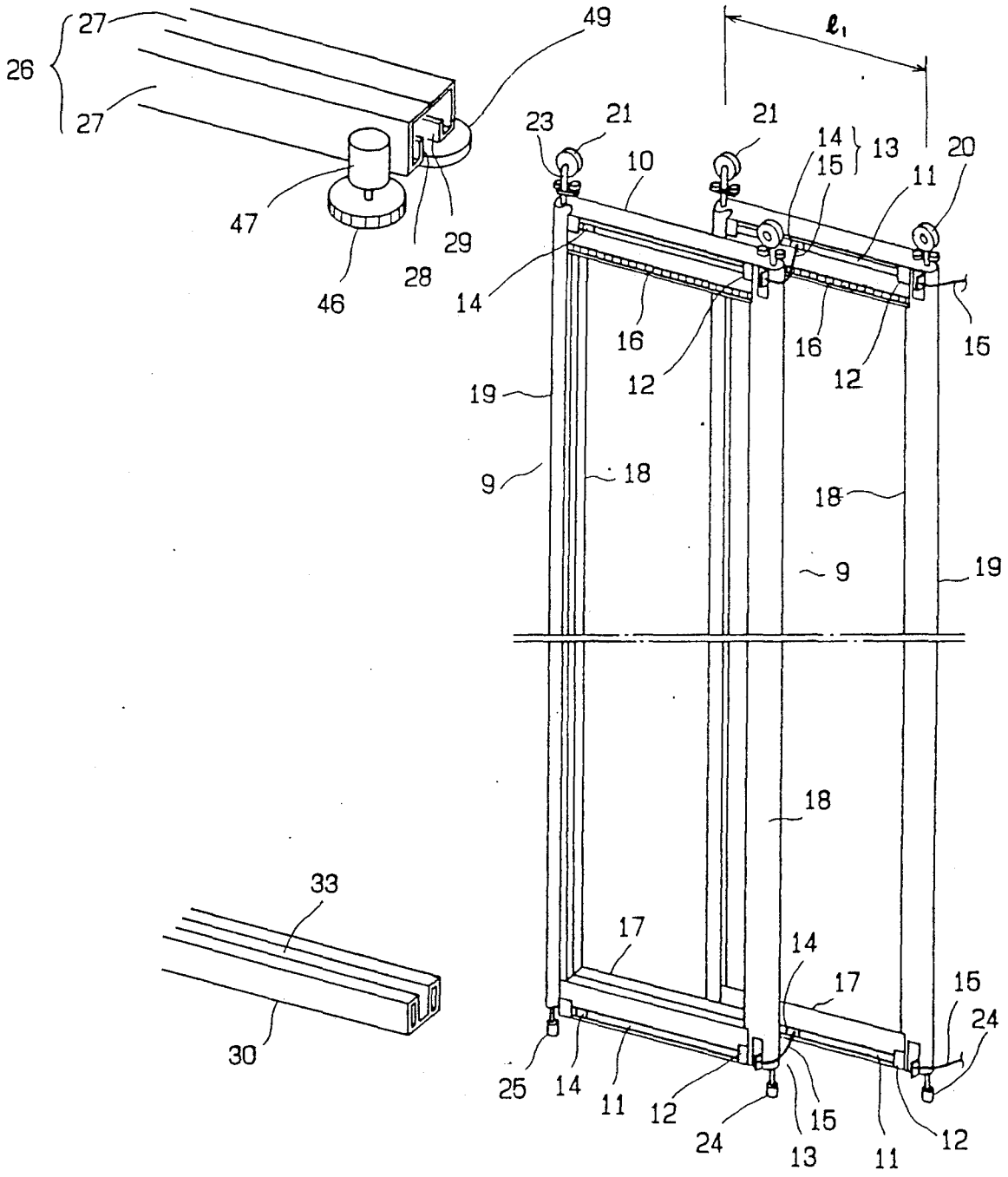

26
27
27
49
47
46
28
29
ℓ_1
23
21
21
10
14
15
13
11
20
14
16
12
16
12
15
19
9
18
18
9
19
18
33
30
17
14
17
15
24
25
14
11
12
24
15
13
11
12
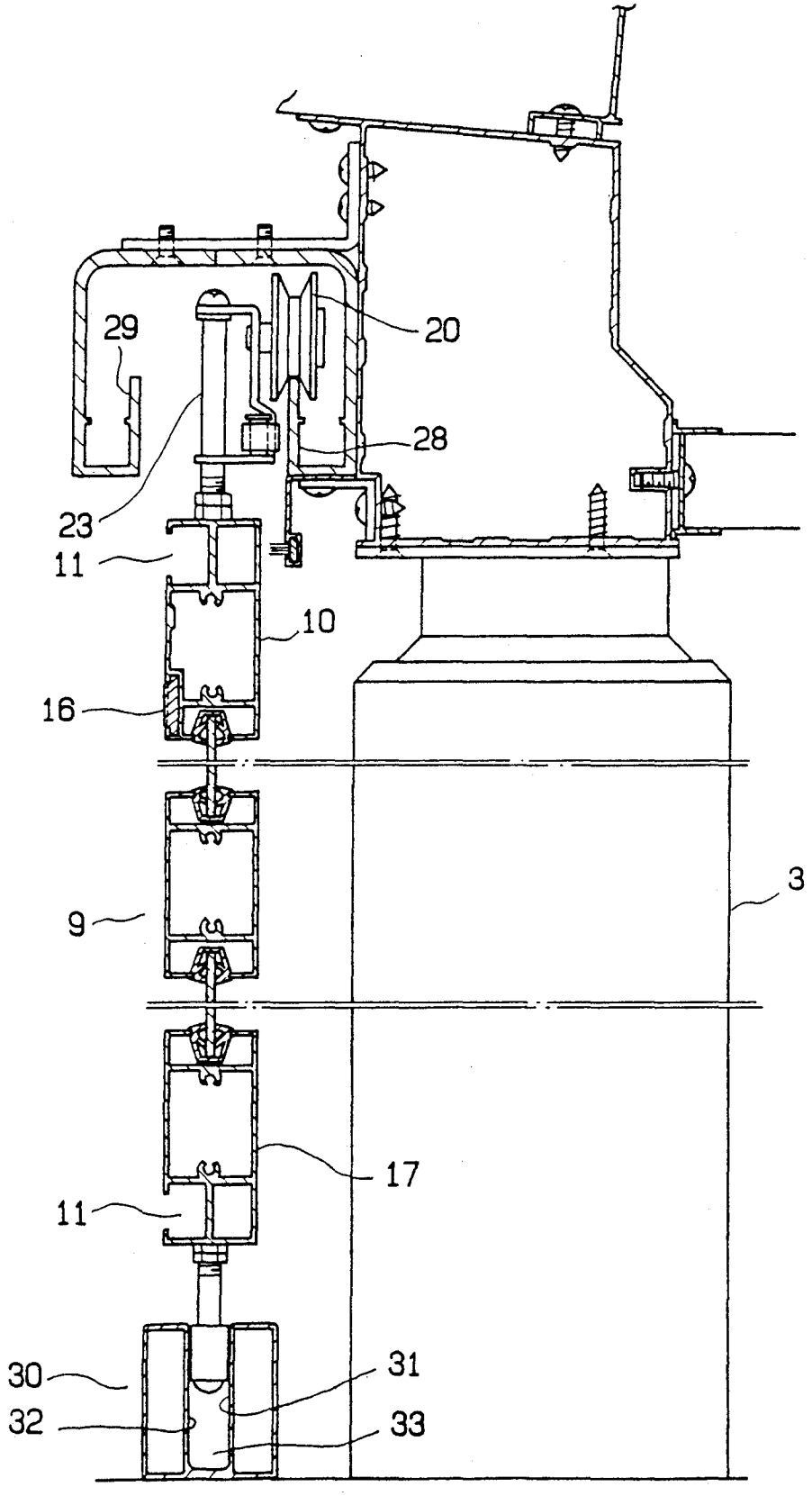
FIG. 7