US008302354B2

(12) **United States Patent**
Quesada

(10) **Patent No.: US 8,302,354 B2**
(45) **Date of Patent: Nov. 6, 2012**

(54) **WINDOW OR DOOR FRAME RECEPTOR BUCK AND RECEPTOR BUCK SYSTEM**

(75) Inventor: **Flavio Quesada**, Miami, FL (US)

(73) Assignee: **CGI Windows & Doors**, Miami, FL (US)

(*) Notice: Subject to any disclaimer, the term of this patent is extended or adjusted under 35 U.S.C. 154(b) by 224 days.

(21) Appl. No.: **12/418,794**

(22) Filed: **Apr. 6, 2009**

(65) **Prior Publication Data**

US 2010/0251644 A1 Oct. 7, 2010

(51) **Int. Cl.**
E06B 1/02 (2006.01)
E06B 1/04 (2006.01)
E06B 1/60 (2006.01)

(52) **U.S. Cl.** **52/215**; 52/204.1; 52/204.5

(58) **Field of Classification Search** 52/215, 52/211, 212, 204.1, 204.5, 846; 49/467
See application file for complete search history.

(56) **References Cited**

U.S. PATENT DOCUMENTS

1,837,748 A * 12/1931 Baum 52/211
2,697,932 A 12/1954 Goodwin
3,284,971 A * 11/1966 Attwood 52/100
3,345,787 A * 10/1967 Busscher 52/242
3,526,074 A * 9/1970 Miller 52/844
3,919,815 A 11/1975 Alabaster
4,004,370 A * 1/1977 Heaney 49/70
4,056,180 A * 11/1977 Gunti ..... 193/35 J
4,172,677 A * 10/1979 Gunti 403/189
4,793,109 A * 12/1988 Noach 52/211
5,293,723 A * 3/1994 Slessor 52/213
5,392,574 A 2/1995 Sayers
5,456,189 A * 10/1995 Belle Isle 108/57.17
5,533,308 A * 7/1996 Fullwood 52/204.5
5,555,682 A * 9/1996 Colitto 52/100
5,596,851 A * 1/1997 Ting 52/211
5,675,937 A * 10/1997 Stebel 49/453
5,746,032 A * 5/1998 Koike et al. 52/204.1
5,857,298 A * 1/1999 Fullwood 52/202
5,887,392 A * 3/1999 Martin 52/204.5
6,122,864 A * 9/2000 Martin 49/428
6,158,182 A * 12/2000 Biebuyck 52/235
6,223,489 B1 * 5/2001 Fisher 52/308
7,086,204 B2 * 8/2006 Salzer 52/208
RE40,041 E 2/2008 Sayers
7,392,623 B2 * 7/2008 Back et al. 52/93.1
7,533,501 B2 * 5/2009 Neal 52/204.54
7,845,124 B1 * 12/2010 Neal 52/204.1
7,941,982 B2 * 5/2011 Merica 52/235
2002/0078640 A1 * 6/2002 Petta 52/204.1
2002/0129573 A1 * 9/2002 Biebuyck 52/235
2003/0163970 A1 * 9/2003 Moore et al. 52/731.5
2003/0221381 A1 12/2003 Ting
2004/0226232 A1 11/2004 Engebretson
2004/0255529 A1 * 12/2004 Pielmeier 52/212
2005/0284046 A1 * 12/2005 Neal 52/204.5
2006/0156655 A1 * 7/2006 Rizzotto, Sr. 52/215
2006/0265977 A1 11/2006 Powers, Jr.

* cited by examiner

Primary Examiner — Robert Canfield
(74) *Attorney, Agent, or Firm* — Greenblum, Bernstein, P.L.C.

(57) **ABSTRACT**

A receptor buck and receptor system for securing a window or door frame. The receptor buck includes a longitudinal rack, a surface of the rack that includes an aperture for accepting a first fastener to fasten the rack to a wall opening surface, and another surface that includes another aperture for accepting a second fastener to fasten the window or door frame to the rack. The receptor system includes the rack, the first and second fasteners, and the fasteners extend in generally the same direction.

31 Claims, 14 Drawing Sheets

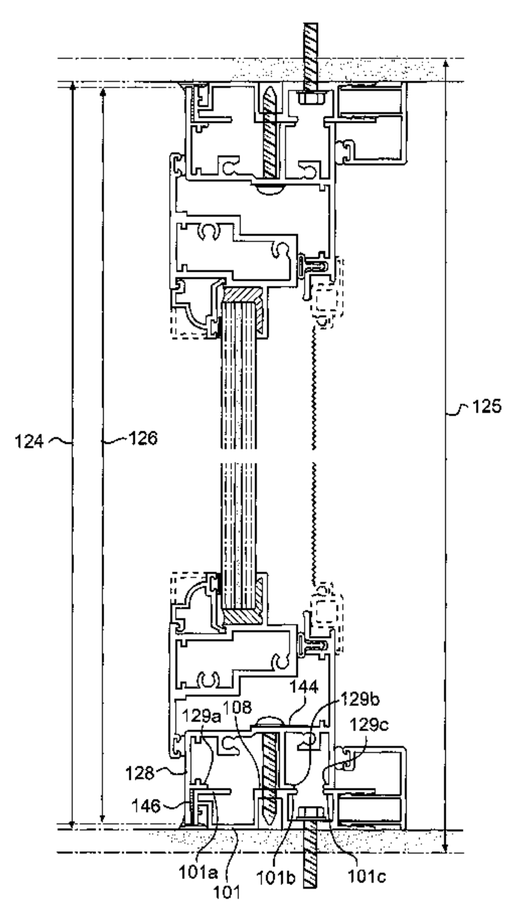

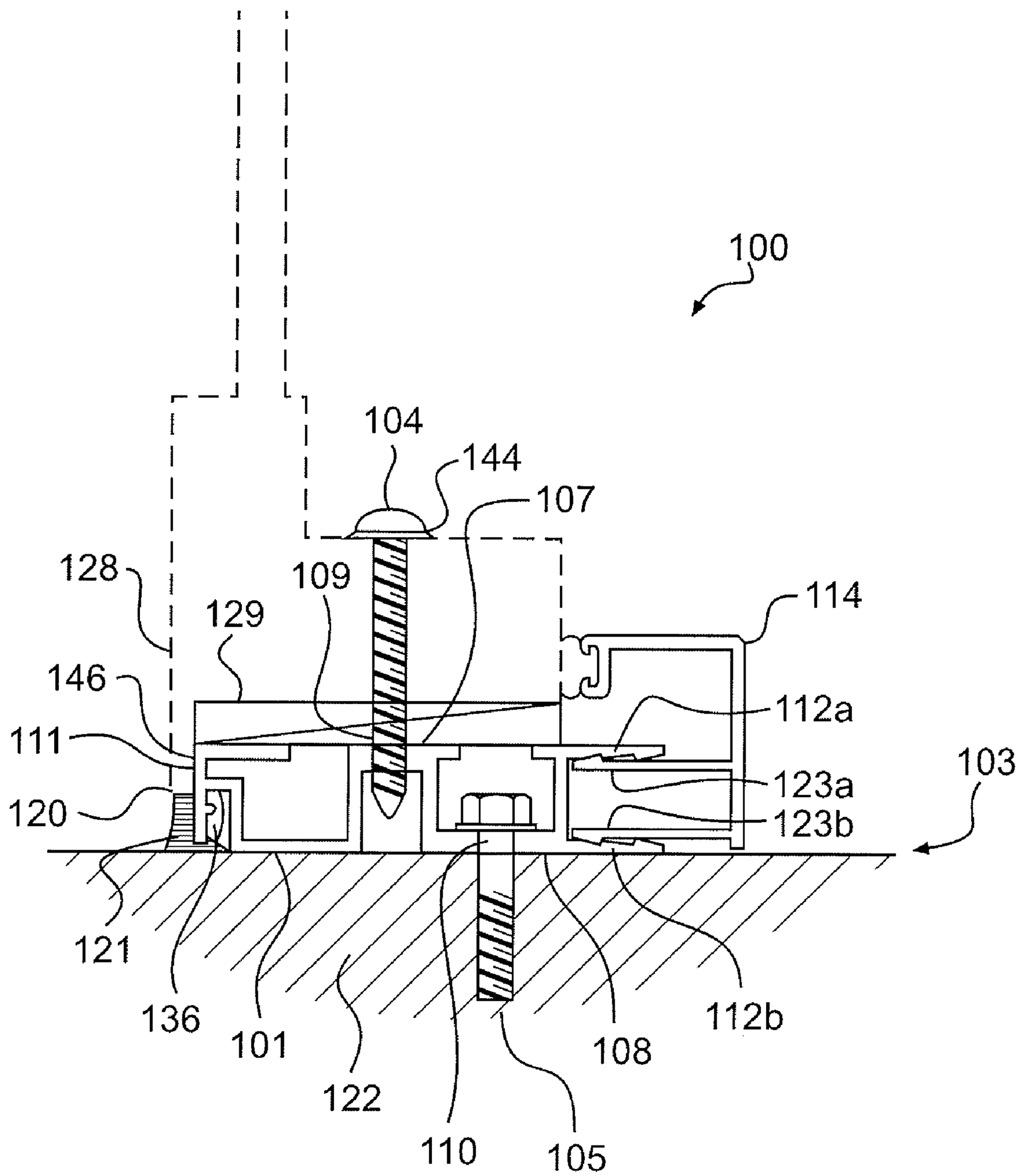
100
104
144
107
128
109
129
114
146
112a
111
123a
103
120
123b
121
136
101
122
110
105
108
112b

FIG. 1

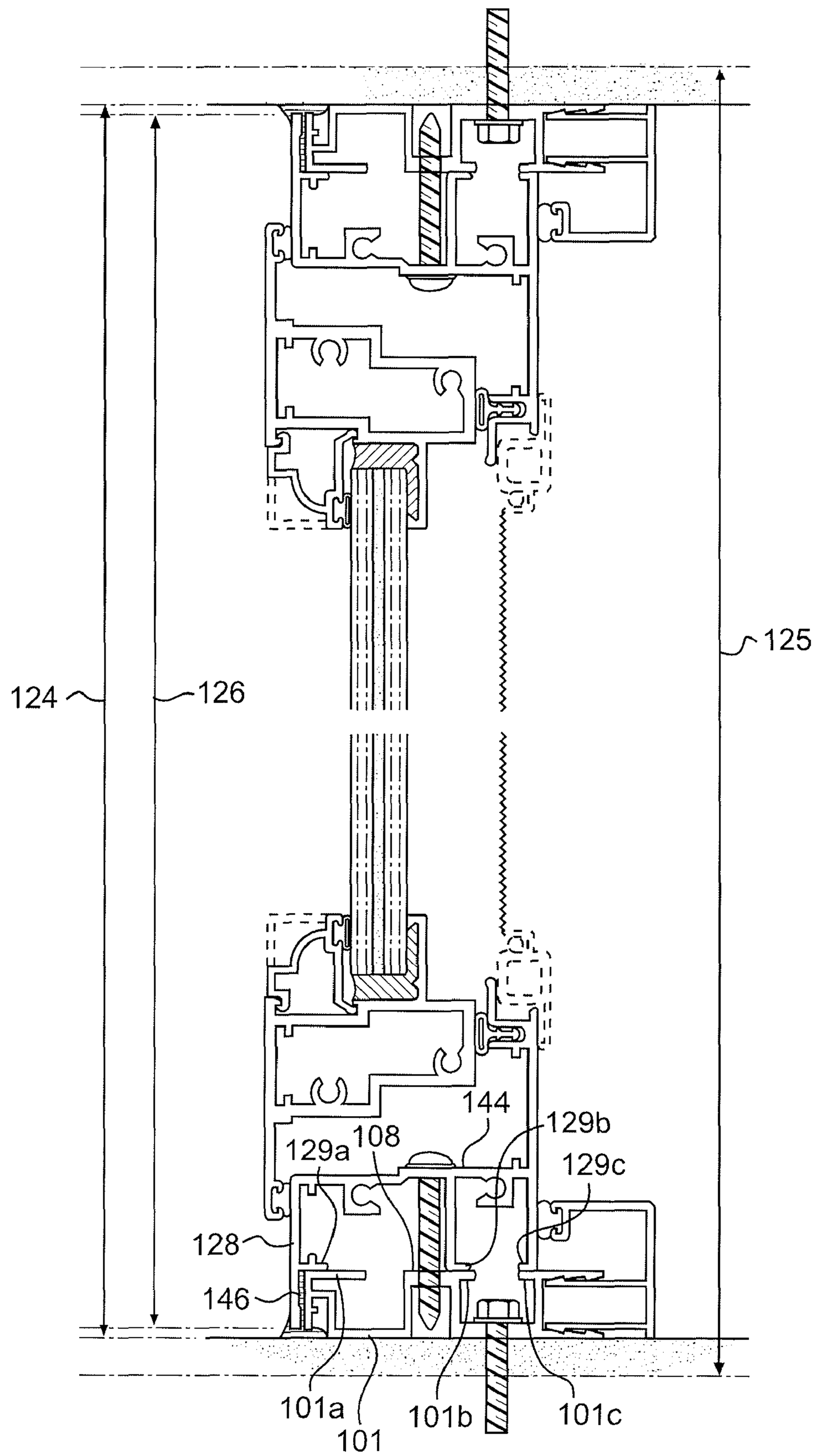

FIG. 2

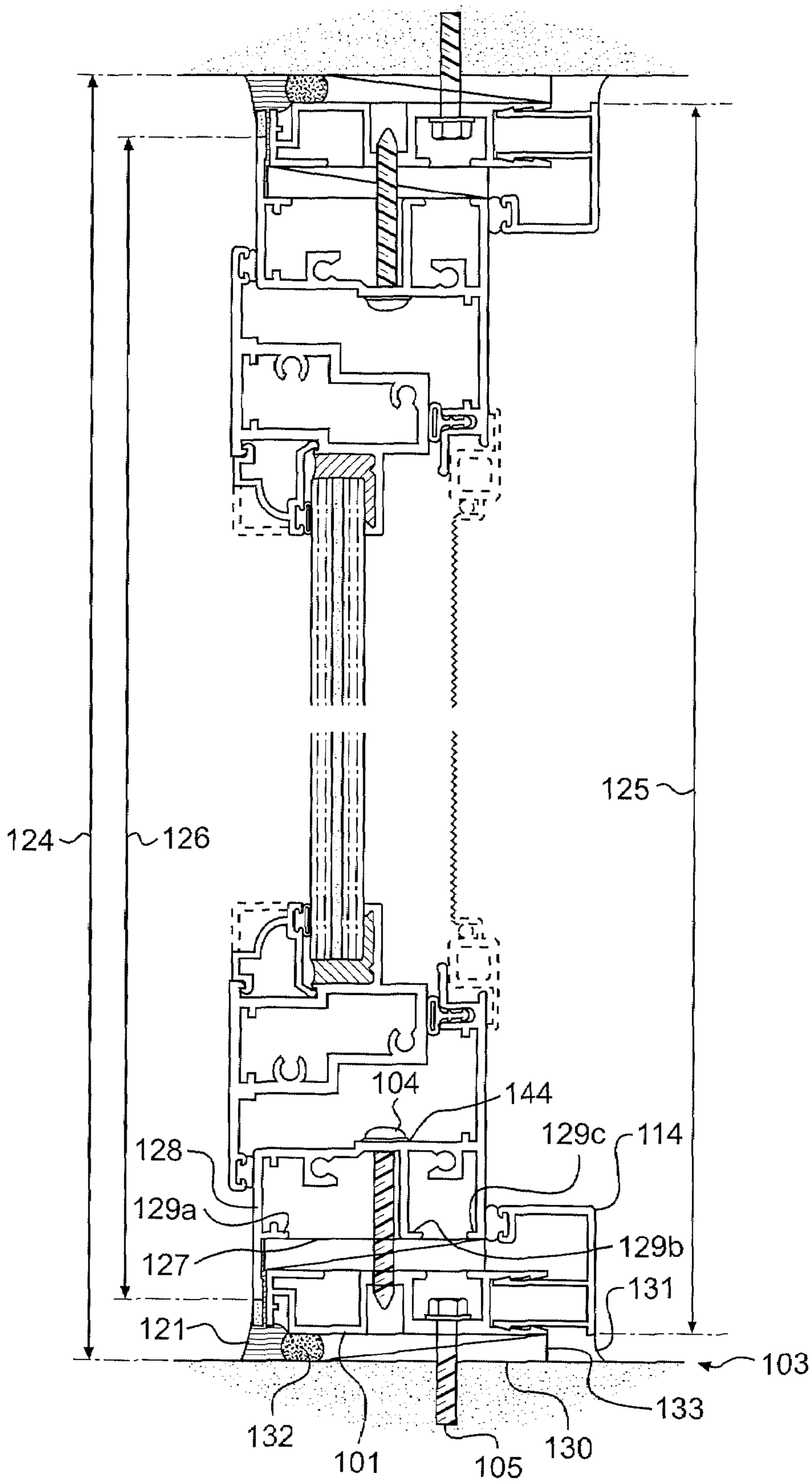
124
126
125
104
144
128
129c
114
129a
127
129b
131
121
103
132
101
105
130
133

FIG. 3

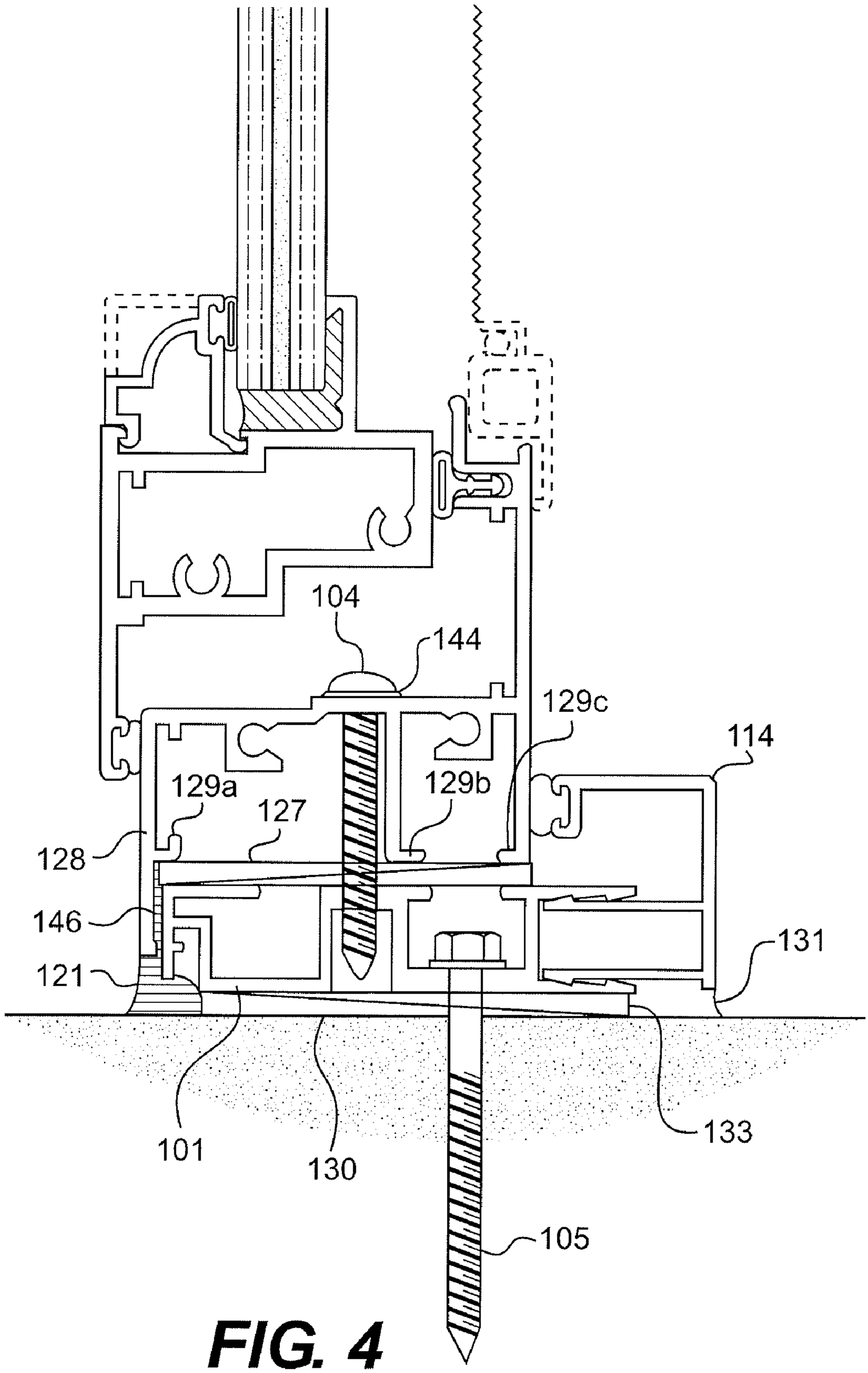

FIG. 4

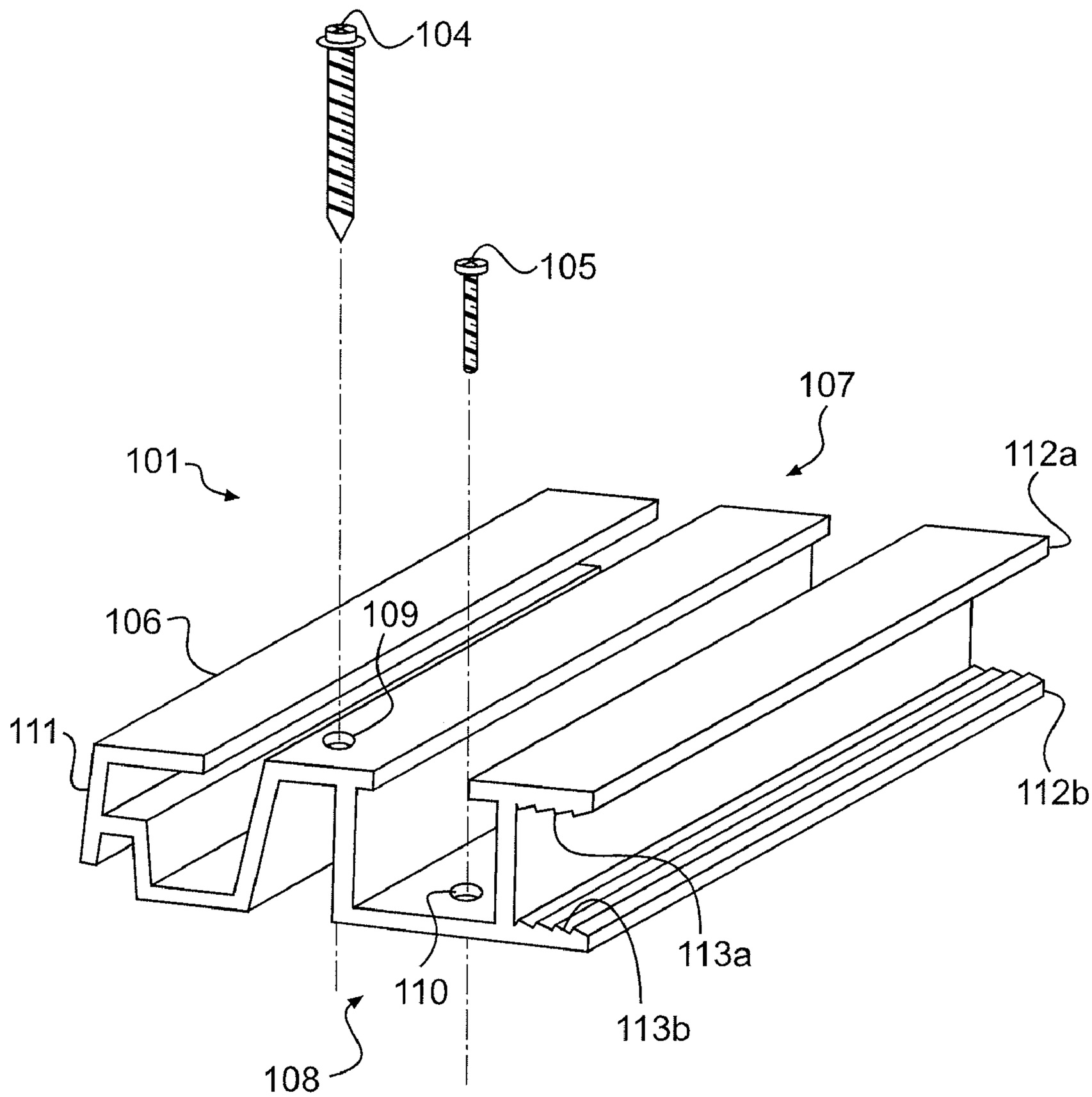

FIG. 5

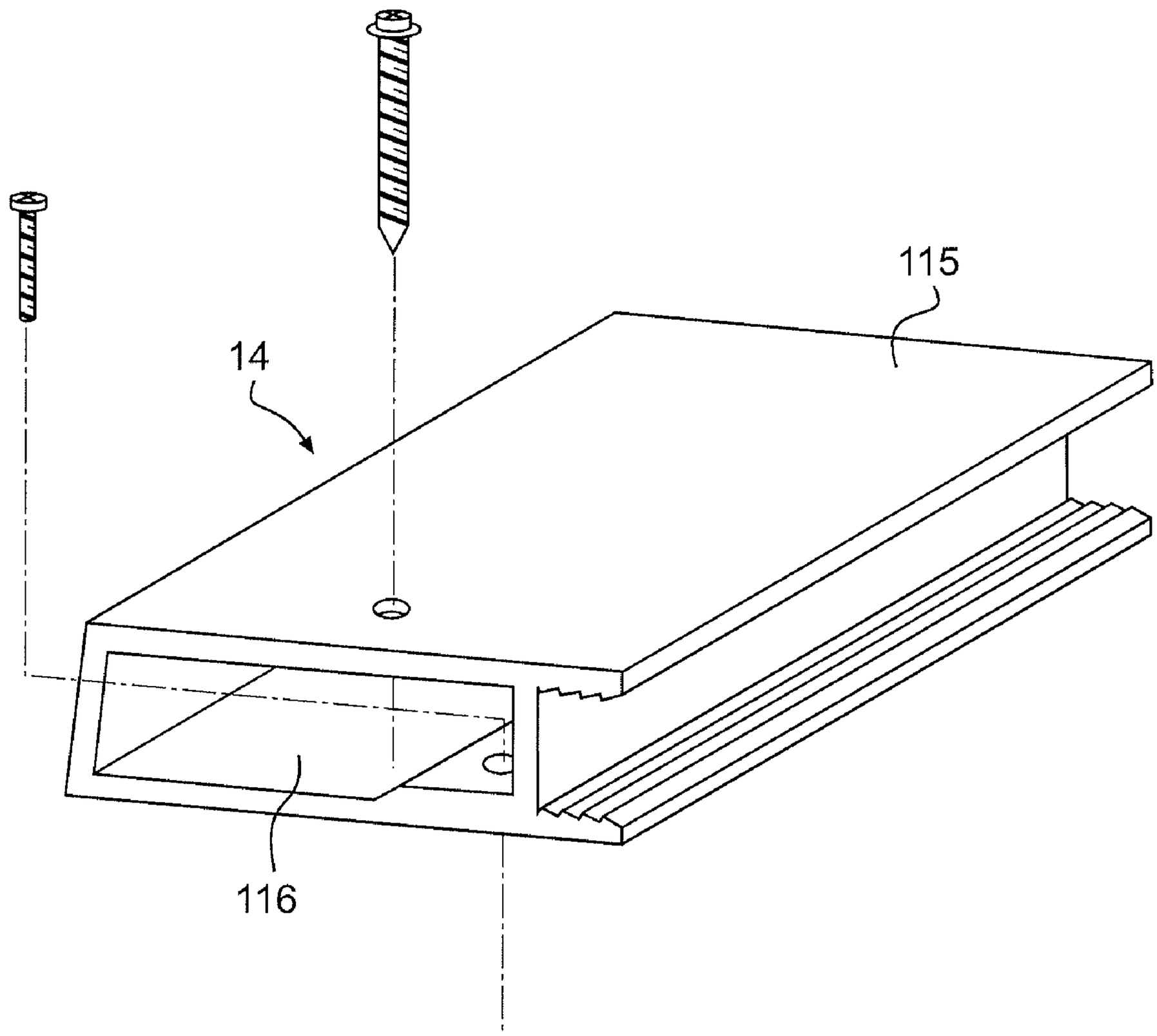

FIG. 6

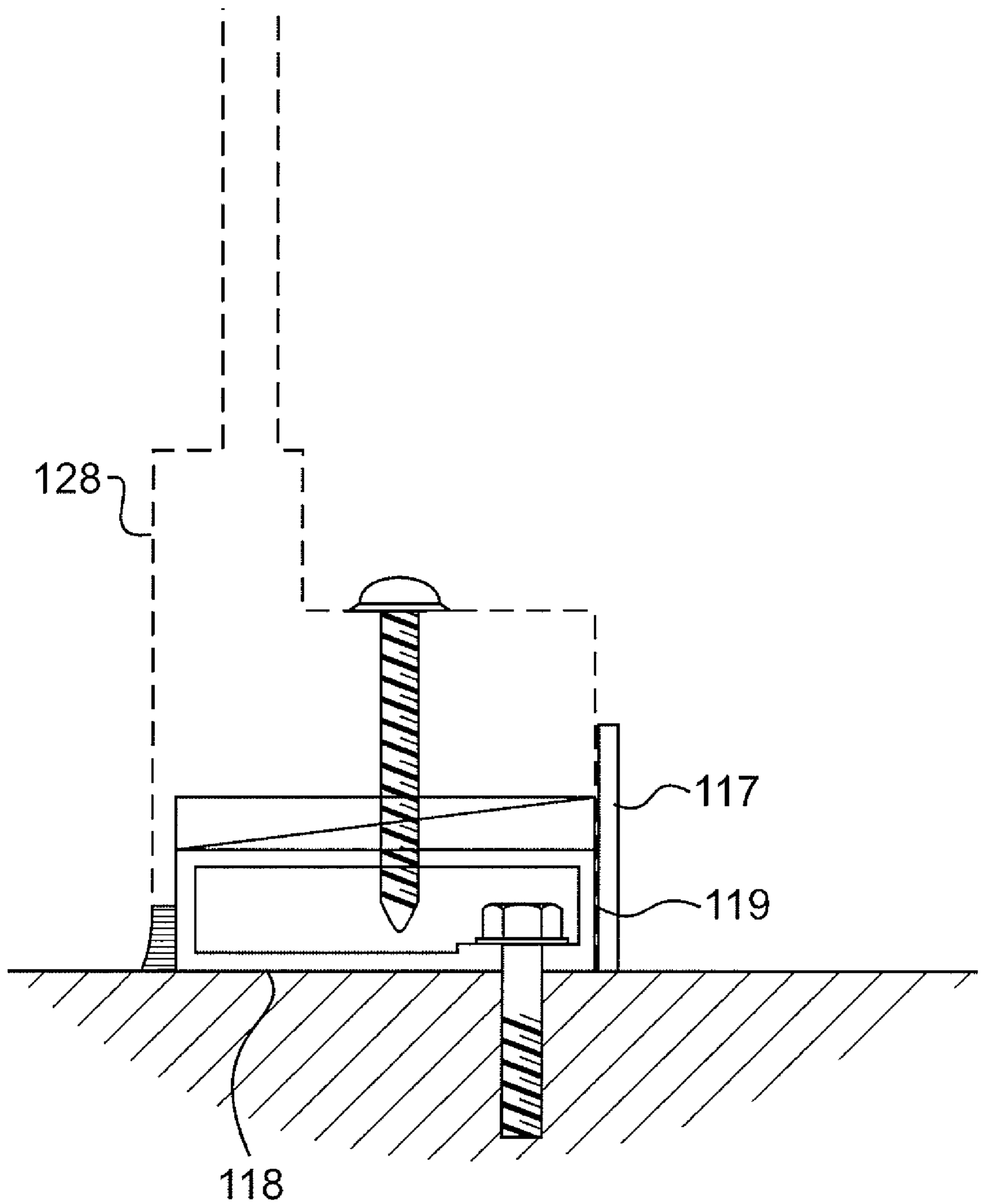

FIG. 7A

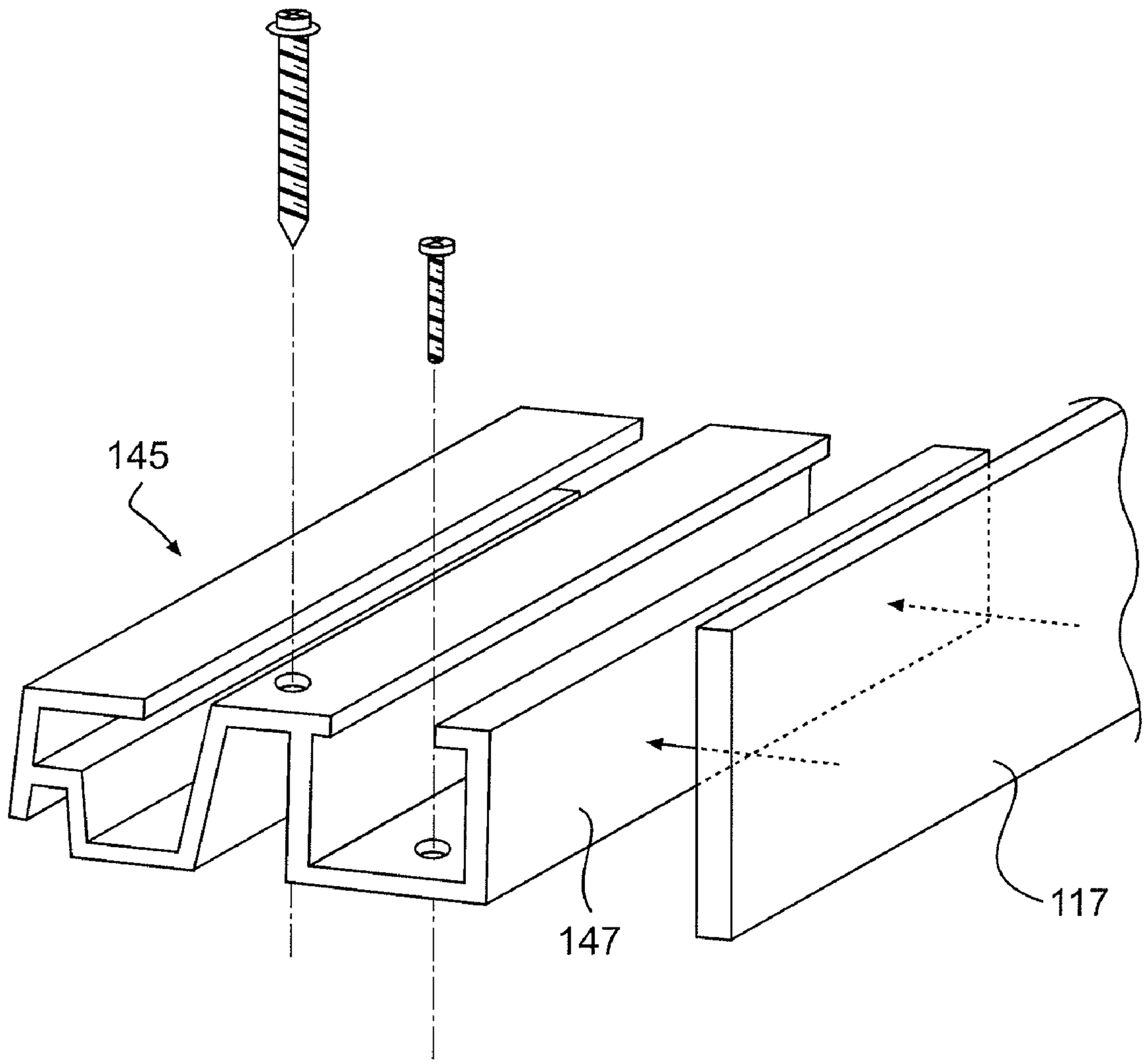

FIG. 7B

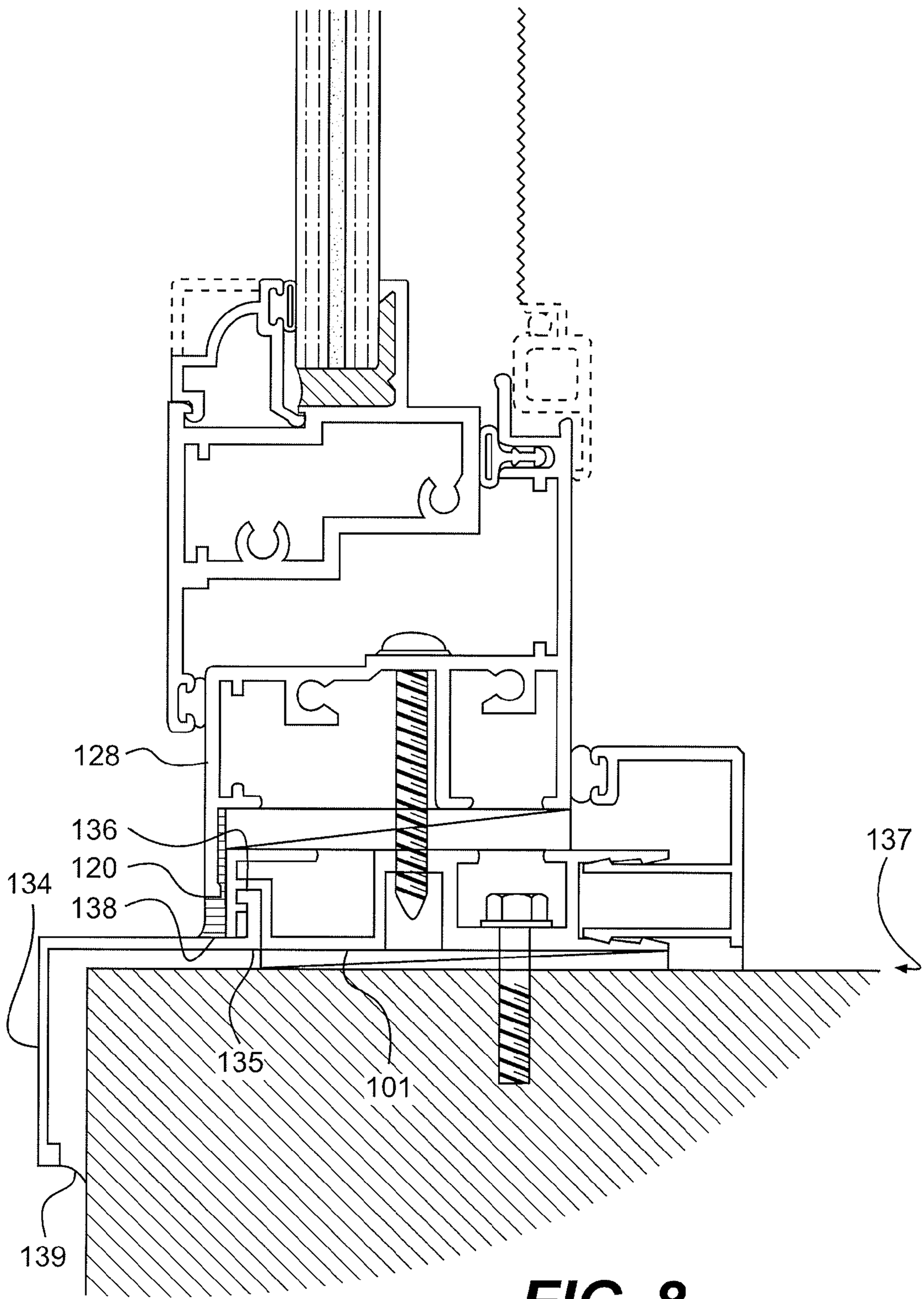

FIG. 8

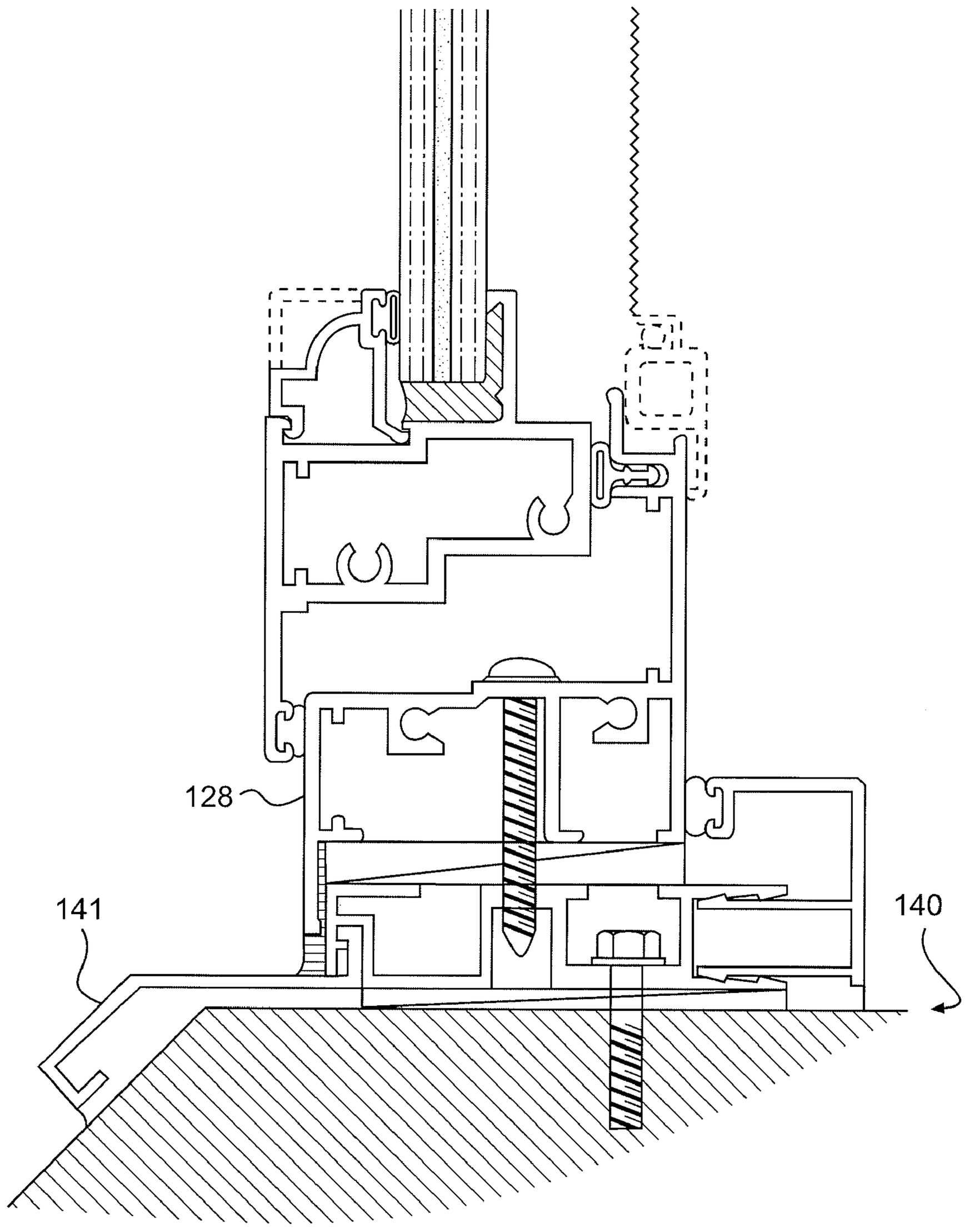

FIG. 9

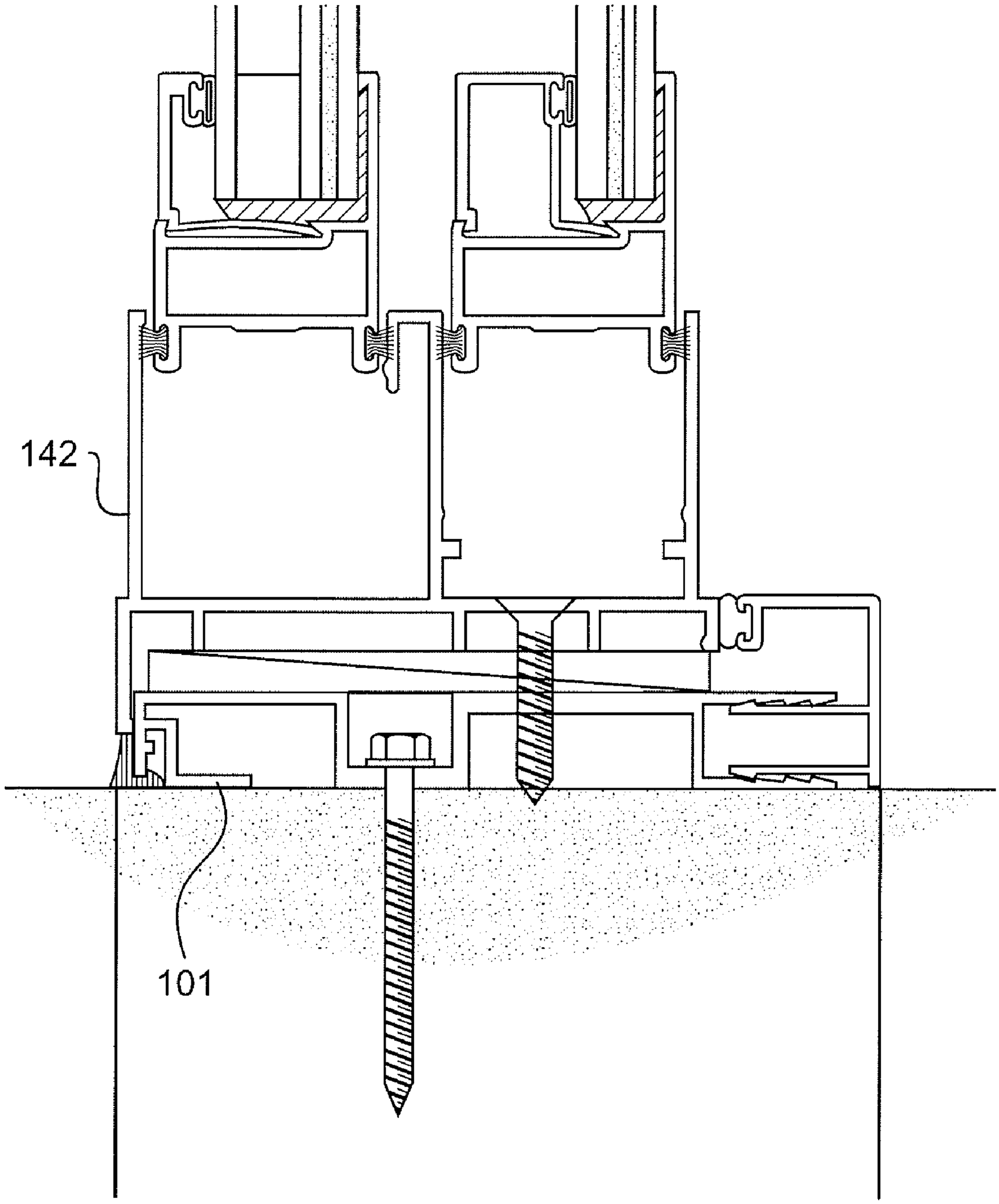

FIG. 10

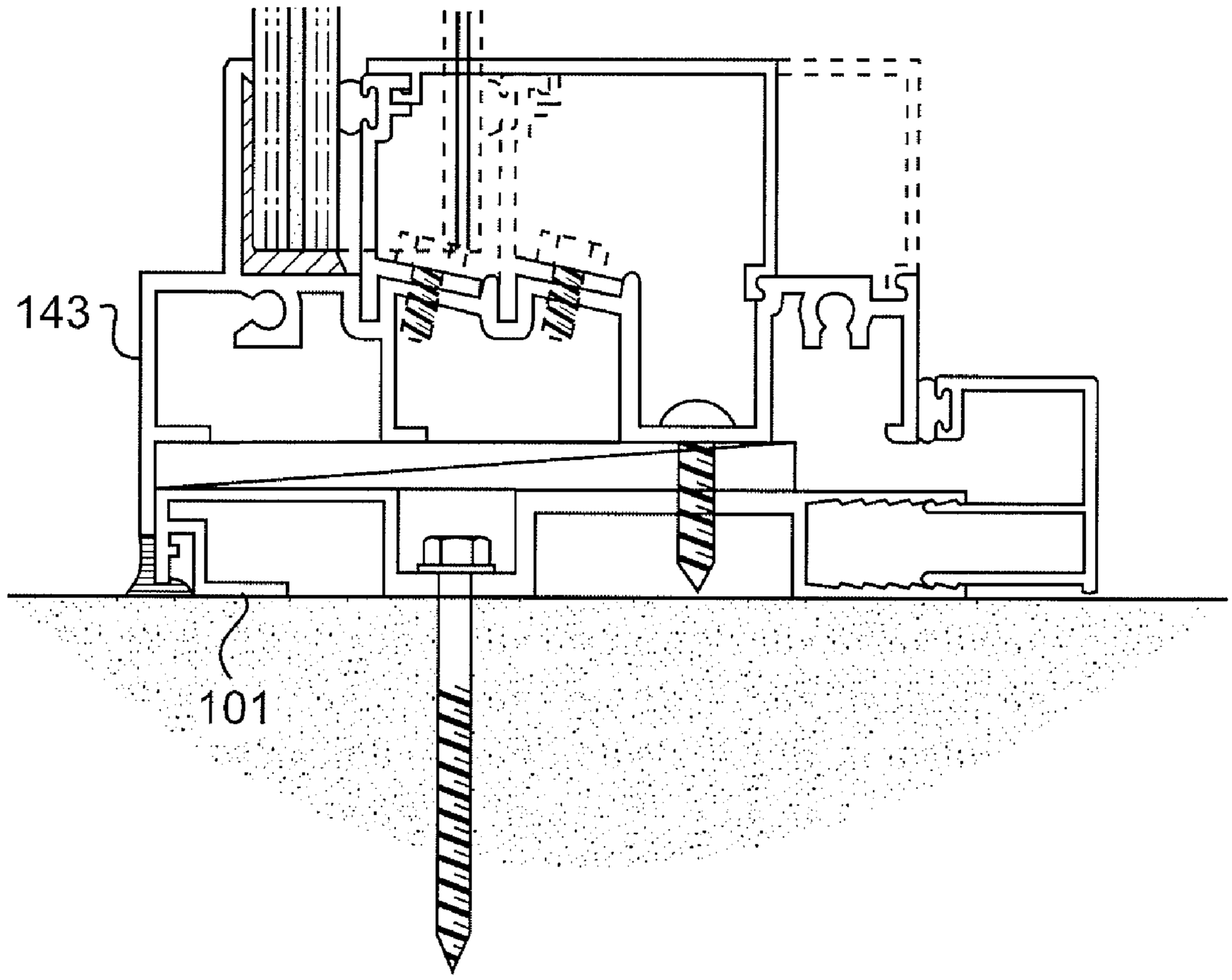

FIG. 11

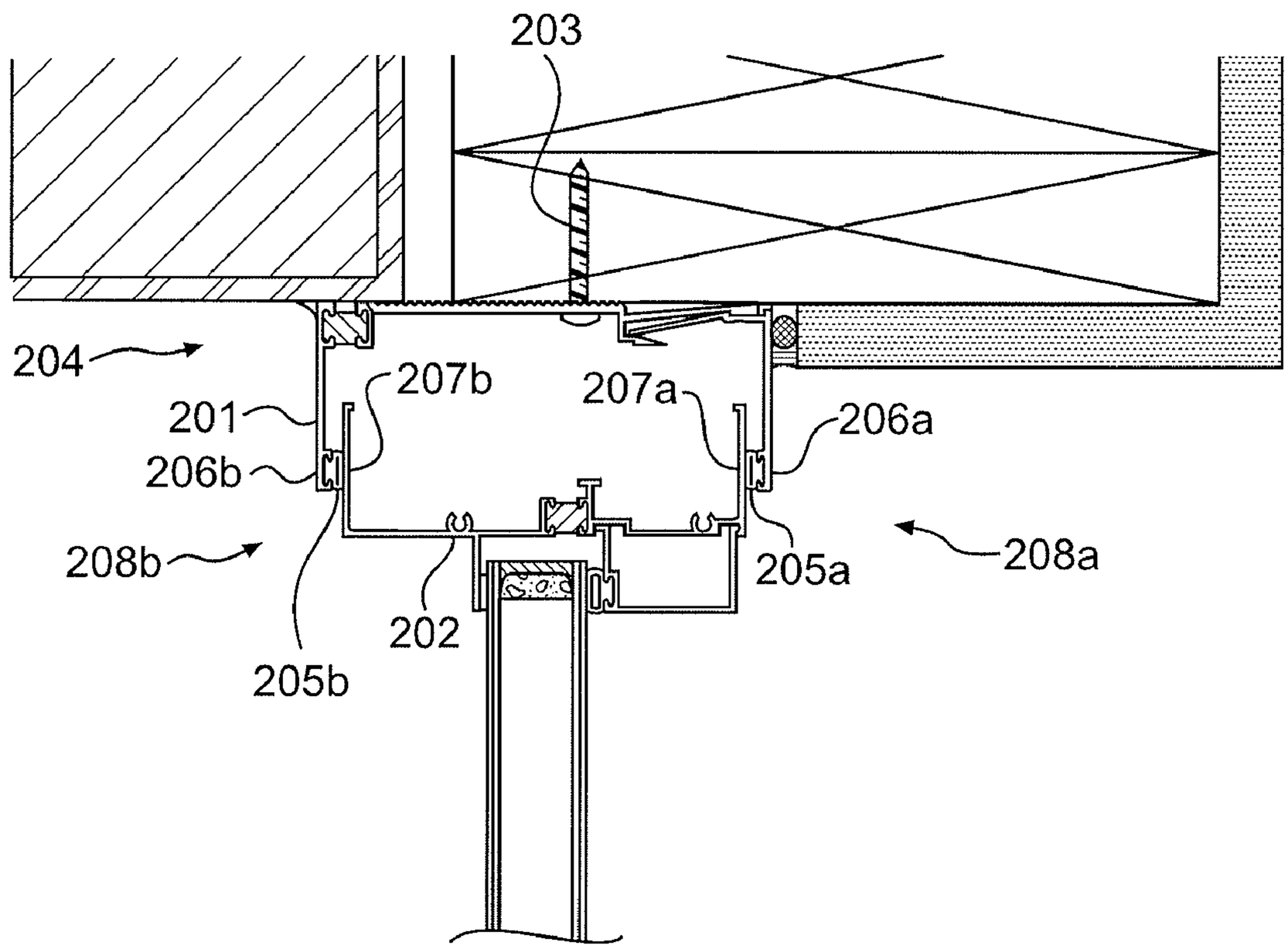

FIG. 12
(PRIOR ART)

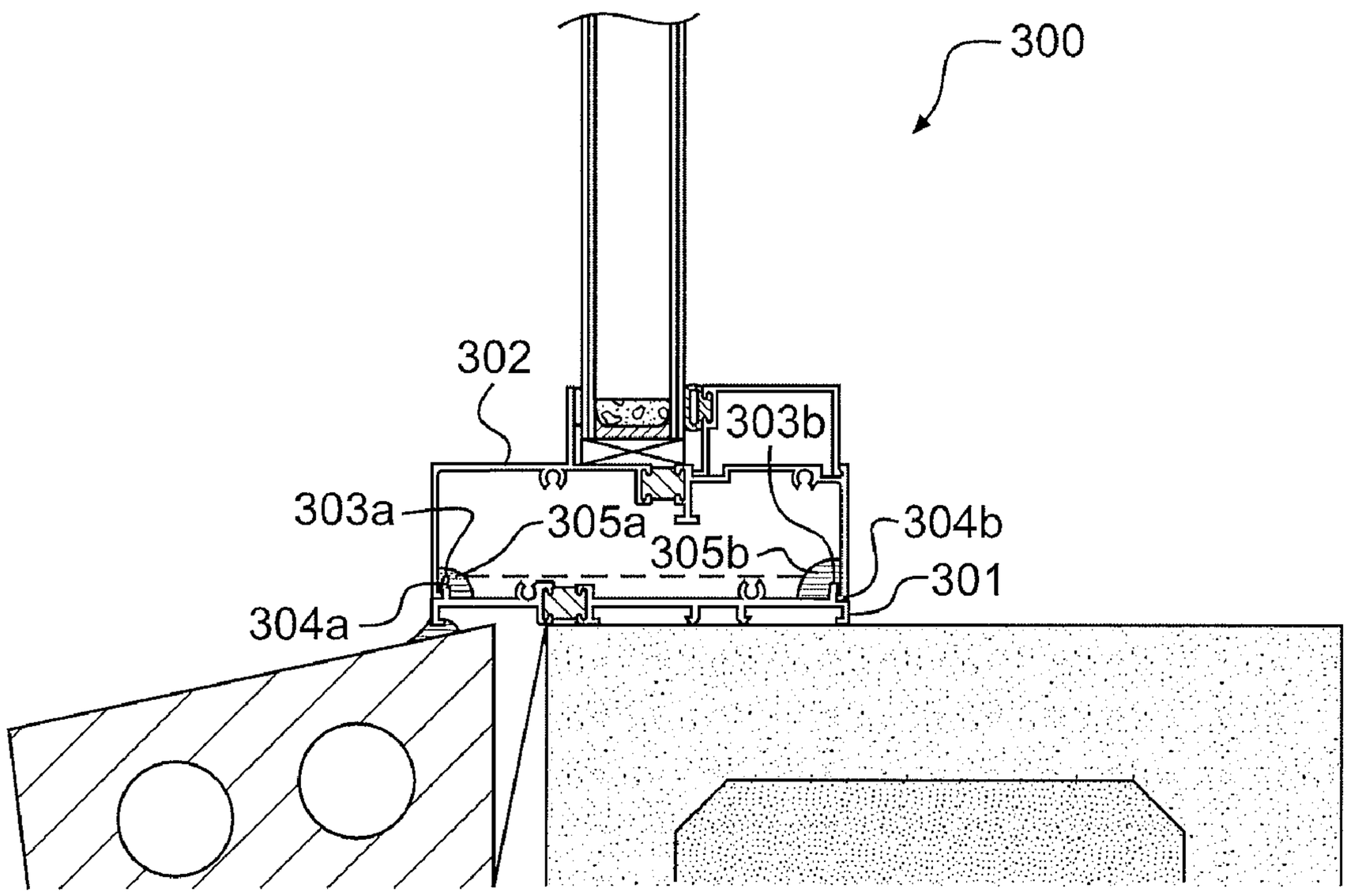

FIG. 13
(PRIOR ART)